TM-354
1st printing

HYDRA

ATARI GAMES

Universal Kit
Installation Instructions

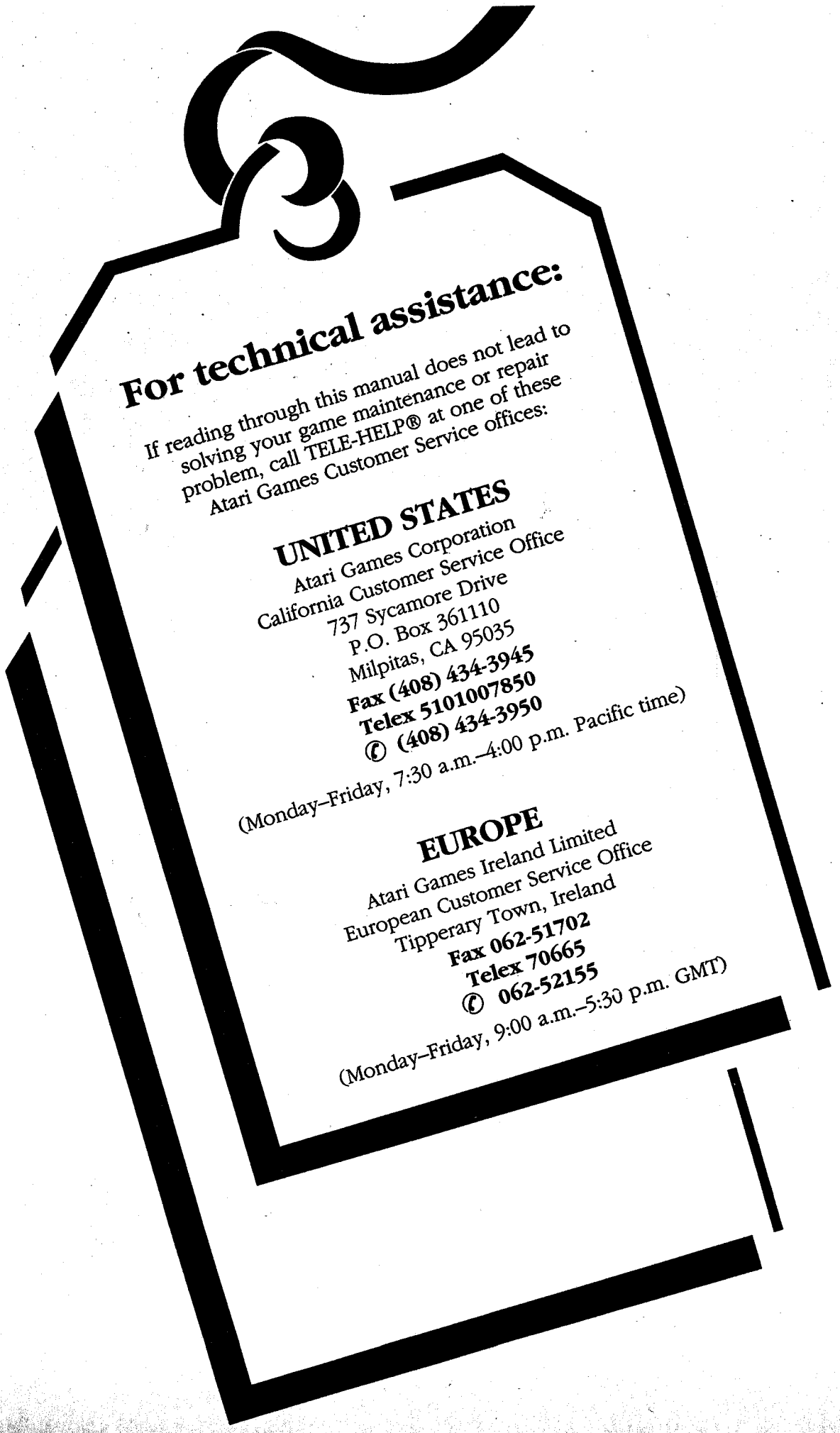

For technical assistance:

If reading through this manual does not lead to solving your game maintenance or repair problem, call TELE-HELP® at one of these Atari Games Customer Service offices:

UNITED STATES

Atari Games Corporation
California Customer Service Office
737 Sycamore Drive
P.O. Box 361110
Milpitas, CA 95035
Fax (408) 434-3945
Telex 5101007850
✆ (408) 434-3950

(Monday–Friday, 7:30 a.m.–4:00 p.m. Pacific time)

EUROPE

Atari Games Ireland Limited
European Customer Service Office
Tipperary Town, Ireland
Fax 062-51702
Telex 70665
✆ 062-52155

(Monday–Friday, 9:00 a.m.–5:30 p.m. GMT)

Hydra™

Universal Kit Installation Instructions

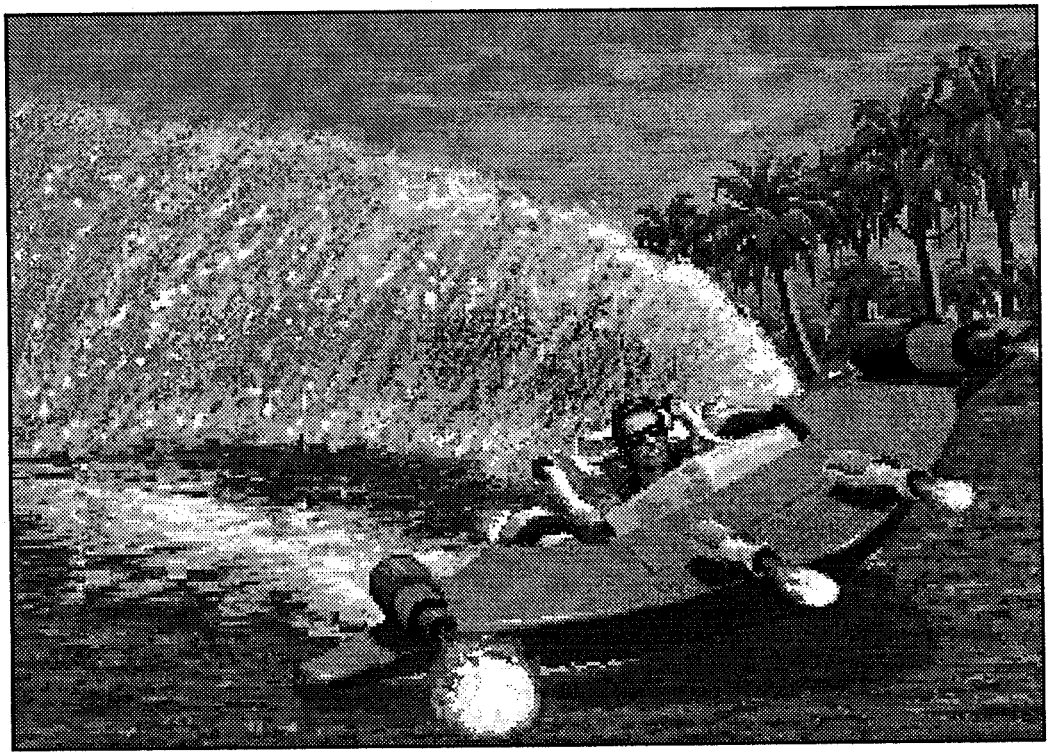

Copyright © 1990 by Atari Games Corporation. All rights reserved.

No part of this publication may be reproduced by any mechanical, photographic or electronic process, or in the form of a phonographic recording, nor may it be stored in a retrieval system, transmitted, or otherwise copied for public or private use, without permission from the publisher.

The game play, all graphic designs, this technical manual, its accompanying schematic diagrams, and the display manual are protected by the U.S. Copyright Act of 1976.

This Act provides for substantial penalties for violating federal copyright laws. Courts can impound infringing articles while legal action is pending. If infringers are convicted, courts can order destruction of the infringing articles.

In addition, the Act provides for payment of statutory damages of up to $50,000 per infringing transaction in certain cases. Infringers may also have to pay costs and attorneys' fees and face an imprisonment of up to five years as well as fines of up to $250,000 in the case of individuals and up to $500,000 in the case of corporations.

Atari Games Corporation will aggressively enforce its copyrights against infringers. We will use all legal means to immediately halt any manufacture, distribution, or operation of a copy of video games made by us. Anyone who purchases such copies risks forfeiting such a game.

Published by:
Atari Games Corporation
675 Sycamore Drive
Milpitas, California 95036-1110

Printed in the U.S.A **5/90**

Produced by the Atari Games Technical Publications Department.

Technical Writing and Design: Andrea Dencker
Illustration: Mary Ohanessian Sumner

Notice Regarding Non-Atari® Parts

WARNING

Use of non-Atari parts or modifications of any Atari game circuitry may adversely affect the safety of your game, and may cause injury to you and your players.

You may void the game warranty (printed on the inside back cover of this manual) if you do any of the following:

- Substitute non-Atari parts in the game.
- Modify or alter any circuits in the game by using kits or parts *not* supplied by Atari Games Corporation.

NOTE

This equipment generates, uses, and can radiate radio frequency energy, and if not installed and used in accordance with the instruction manual, may cause interference to radio communications. It has been tested and found to comply with the limits for a Class A computing device pursuant to Subpart J of Part 15 of Federal Communications Commission (FCC) Rules, which are designed to provide reasonable protection against such interference when operated in a commercial environment. Operation of this equipment in a residential area or modification to this equipment is likely to cause interference, in which case the user, at his own expense, will be required to take whatever measures may be required to correct the interference. If you suspect interference from an Atari game at your location, check the following:

- All ground wires in the game are properly connected as shown in the game wiring diagram.
- The power cord is properly plugged into a grounded three-wire outlet.
- On games provided with an Electromagnetic Interference (EMI) ground cage, be sure that the game printed-circuit boards (PCBs) are properly installed on the EMI ground cage and that the end board is securely installed with **all** screws in place and tightened.

If you are still unable to solve the interference problem, please contact Customer Service at Atari Games Corporation. See the inside front cover of this manual for service in your area.

Contents

1 Installation

How to Use This Manual 1-1
Cabinet Equipment Requirements 1-2
Tools Required 1-2
Inspecting the Kit 1-3
Preparing the Cabinet for the Kit Installation 1-3
Assembling the Control Panel 1-3
Installing the Foot Pedal 1-3
Connecting the JAMMA Harness 1-4
Installing the Hydra Game PCB 1-7
Installing the Bezel, Labels, Decals, and Attraction Assembly 1-7
Setting the Coin and Game Options 1-7
Game Play 1-7

2 Self-Test

RAM and ROM Test 2-2
Entering and Exiting the Self-Test 2-2
Select Test Menu 2-2
Statistics 2-3
Coin Options 2-3
Game Options 2-4
Alphanumeric Test 2-4
Motion Object Test 2-5
Switch Test 2-5
Playfield Test 2-6
Color RAM Test 2-6
Convergence Test 2-6
Sound Test 2-7

3 Maintenance and Troubleshooting

Video Display Sync Problems 3-3
X-Y Steering Control 3-3
Foot Pedal Assembly 3-3
ROMs and RAMS 3-3

4 Parts Illustrations

See the list of illustrations that follows.

5 Schematics

See the list of illustrations and list of tables that follows.

Hydra Statistics Sheet

Warranty

Illustrations

Figure 1-2 Hydra Kit Parts Installed in Cabinet 1-6

Figure 2-1 Select Test Menu Screen 2-2
2-2 Statistics Screen 2-3
2-3 Coin Options Screen 2-4
2-4 Game Options Screen 2-4
2-5 Alphanumeric Test Screen 2-5
2-6 Motion Object Test Screen 2-5
2-7 Switch Test Screen 2-6
2-8 Playfield Test Screen 2-6
2-9 Color RAM Test Screen 2-6
2-10 Convergence Test Screen 2-7
2-11 Sound Test Screen 2-7

Figure 4-1 Hydra Kit Parts List 4-2
4-2 X-Y Steering Control Assembly 4-4
4-3 Hydra Foot Pedal Assembly 4-6
4-4 Hydra Game PCB Assembly 4-7
4-5 JSA Audio II PCB Assembly 4-8

Figure 5-1 Hydra Game PCB Assembly Schematic Diagram 5-2
5-2 JSA Audio II PCB Assembly Schematic Diagram 5-8
5-3 Faulty RAM/ROM Tables 5-14

Tables

Table 1-1 Equipment Requirements 1-2
1-2 Contents of Hydra Kit 1-2
1-3 JAMMA Pin and Wire Connections 1-4

Table 2-1 Bad RAM Location by Error Address 2-2
2-2 Bad ROM Location by Error Address 2-2
2-3 Summary of the Self-Test Screens 2-2
2-4 Coin Option Settings 2-4
2-5 Game Option Settings 2-5

Table 3-1 Troubleshooting Table 3-2
3-2 Voltage Inputs and Test Points on the PCB 3-3
3-3 What ROM Problems Look Like 3-3
3-4 Atari Games Video Connector Pin Assignments 3-3
3-5 Screen Colors Indicating Bad RAMS 3-3

Safety Summary

The following safety precautions apply to all game operators and service personnel. Specific warnings and cautions will be found in this manual whenever they apply.

WARNING

Properly Ground the Game. Players may receive an electrical shock if this game is not properly grounded! To avoid electrical shock, do not plug in the game until it has been inspected and properly grounded. This game should only be plugged into a grounded three-wire outlet. If you have only a two-wire outlet, we recommend you hire a licensed electrician to install a three-wire grounded outlet. If the control panel is not properly grounded, players may receive an electrical shock! After servicing any part on the control panel, check that the grounding wire is firmly secured to the inside of the control panel. After you have checked this, lock up the game.

AC Power Connection. Before you plug in the game, be sure that the game's power supply can accept the AC line voltage in your location. The line voltage requirements are listed in the first chapter of this manual.

Disconnect Power During Repairs. To avoid electrical shock, disconnect the game from the AC power before removing or repairing any part of the game. If you remove or repair the video display, be very careful to avoid electrical shock. High voltages continue to exist even after power is disconnected in the display circuitry and the cathode-ray tube (CRT). Do not touch the internal parts of the display with your hands or with metal objects! Always discharge the high voltage from the CRT before servicing it. Do this after you disconnect it from the power source. First, attach one end of a large, well-insulated, 18-gauge jumper wire to ground. Then momentarily touch the free end of the grounded jumper wire to the CRT anode by sliding the wire under the anode cap. Wait two minutes and do this again.

Use Only Atari Parts. To maintain the safety of your Atari game, use only Atari parts when you repair it. Using non-Atari parts or modifying the game circuitry may be dangerous, and could injure you and your players.

Handle the CRT With Care. If you drop the CRT and it breaks, it may implode! Shattered glass from the implosion can fly six feet or more.

Use the Proper Fuses. To avoid electrical shock, use replacement fuses which are specified in the parts list for this game. Replacement fuses must match those replaced in fuse type, voltage rating, and current rating. In addition, the fuse cover must be in place during game operation.

CAUTION

Properly Attach All Connectors. Make sure that the connectors on each printed circuit board (PCB) are properly plugged in. The connectors are keyed to fit only one way. If they do not slip on easily, do not force them. If you reverse a connector, it may damage your game and void your warranty.

Ensure the Proper AC Line Frequency. Video games manufactured for operation on 60 Hz line power (used in the United States) must not be operated in countries with 50 Hz line power (used in Europe).

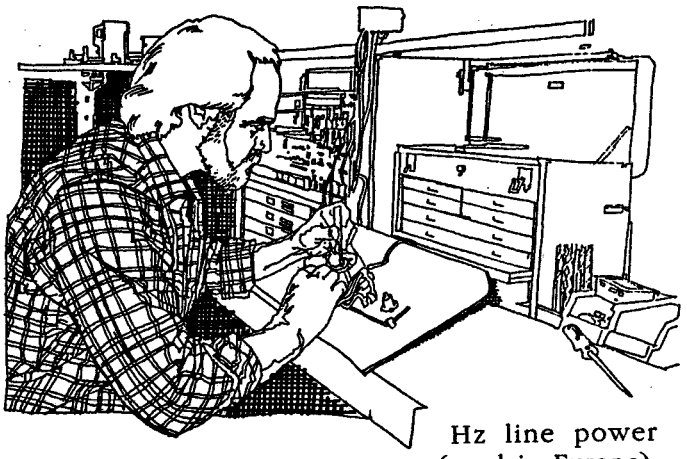

If a 60 Hz machine operates on 50 Hz line power, the fluorescent line ballast transformer will overheat and cause a potential fire hazard. Check the product identification label on your machine for the line frequency required.

ABOUT NOTES, CAUTIONS, AND WARNINGS

In Atari publications, notes, cautions and warnings have the following meaning:

NOTE — A highlighted piece of information.

CAUTION — Equipment and/or parts can be damaged or destroyed if instructions are not followed. You will void the warranty on Atari printed-circuit boards, parts thereon, and video displays if equipment or parts are damaged or destroyed due to failure of following instructions.

WARNING — Players and/or technicians can be killed or injured if instructions are not followed.

CHAPTER 1

Installation

How to Use This Manual

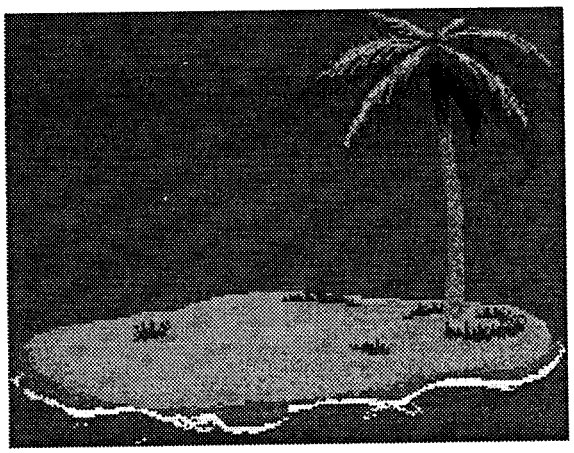

This manual provides information for installing, testing, and troubleshooting the Hydra™ Universal kit. The manual is divided into the following chapters: ■ Chapter 1 describes how to install the Hydra kit in your cabinet. This chapter also describes the Hydra game play. Also included is the template for drilling the holes into the control panel and into the cabinet front for the foot pedal. ■ Chapter 2 describes the self-test and how to use the self-test screens. ■ Chapter 3 contains troubleshooting and maintenance procedures. ■ Chapter 4 contains the kit parts list and parts illustrations. ■ Chapter 5 contains the schematics for the Hydra game PCB and JSA Audio II PCB.

WARNING

To avoid electrical shock, unplug the cabinet while installing the kit. After installation, plug the game only into a grounded 3-wire outlet.

Cabinet Equipment Requirements

Table 1-1 lists the equipment required in the cabinet into which you are installing the Hydra kit.

Table 1-1 Equipment Requirements

Equipment	Specification
Video Display	Color RGB monitor
	Separate positive horizontal and vertical sync or negative composite sync
	Horizontal mounting
	Horizontal frequency: 15.750 KHz
	Vertical frequency: 60 Hz
	Video input: 1V to 3V peak-to-peak positive polarity
Control Panel	Metal only
Speaker	8 Ω, 10 W
Coin Mechanism	+5 VDC or +12 VDC
Power Cord	Three-conductor with ground
Power Supply	+5 VDC ± 0.25V @ 3.0 amps
	+12 VDC @ 1.0 amp
	-5 VDC @ 1.0 amp

CAUTION

Do not unplug or plug in the Hydra game printed-circuit board (PCB) edge connector while the power is on. You could seriously damage the PCB.

Tools Required

- Two C-clamps
- Drill with a 1/4-inch and 5/16-inch drill bits, a 1 3/4-inch hole cutter (or a 1 3/4-inch chassis punch), and a 1 3/16-inch hole cutter
- Phillips screwdriver
- Flat-blade screwdriver
- Socket wrench set and ratchet
- 1/4-20 hex wrench
- Wire cutters and strippers
- Straight edge
- Squeegee
- X-ACTO™ knife
- Insulated wire connectors (if you are installing a new JAMMA harness)

Table 1-2 Contents of Hydra Kit

Part No.	Description	Quantity
72-07002	#1/4 Fender Washer	8
72-6612S	#6 x 3/4-Inch-Long, Pan-Head, Cross-Recessed Type-AB Screw	4
75-5112B	#10-24 x 3/4-Inch-Long Black Carriage Bolt	4
75-5520B	#1/4-20 x 1 1/4-Inch-Long Black Carriage Bolt	4
038158-01	Product I.D. Label	1
039450-01	FCC Compliance Label	1
047205-01	Attraction Panel Shield	1
047209-01	Control Panel Cover	1
047853-01	Control Panel Mounting Bracket	1
047889-01	Attraction Panel Film	1
047890-01	Control Panel Decal	1
047891-01	Side Panel Decal	2
047892-01	19/25-Inch Monitor Bezel	1
141026-001	.50-Inch I.D. Split Ferrite Bead	2
160044-001	Snap-Action Switch	2
175014-1040	#10 Flat Washer	4
175014-1050	#1/4 Flat Washer	4
176038-4412	#1/4-20 x 3/4-Inch-Long Tamper-Proof Flush-Countersunk-Cap Screw	4
177010-240	#10-24 Hex. Polymer Locknut	4
177010-244	#1/4-20 Hex. Polymer Locknut	12
178032-002	#10-24 Wire & Cable Tie	1
178126-002	5/32" Tamper-Proof Hex. Key Driver	1
178265-001	Nylon L-Style Standoff	4
178297-001	Red Square "Boost" Button With Lamp	2
A043825-02	Foot Pedal Assembly	1
A046501-01	JAMMA Harness Assembly	1
A047492-01	X-Y Steering Control Assembly	1
A047955-01	Hydra Board Set. Consists of:	1
A047896-01	Hydra Game PCB Assembly	1
A047184-03	JSA Audio II PCB Assembly	1
177000-536	#6-32 Nylon Nut	3
178278-616	#6 Threaded PCB Standoff	3
A047964-01	Interconnect Control Harness	1
TM-354	Hydra Universal Kit Installation Instructions	1

(Packaging materials are not listed)

Inspecting the Kit

Check to see that you have all the parts listed in the kit parts list in Table 1-2. If any part is missing or damaged, contact your distributor with the Hydra kit serial number, part number and description of the missing or damaged parts, and date received.

Preparing the Cabinet for the Kit Installation

1. Turn off power to the game.
2. Remove the following from the cabinet:
   - Old PCB(s).
   - Game harness, if it is not Japan Amusement Machinery Manufacturers Association (JAMMA)-compatible.
   - Control panel decals, labels, and controls.
   - Side decals, graphics, and adhesive. If the cabinet sides are damaged, repair them before putting on the new decals.
   - Video display shield, display bezel, attraction shield, and marquee.
3. Wipe down and vacuum the cabinet. Paint the cabinet, if required.

Assembling the Control Panel

WARNING

The pod for the X-Y steering control must be installed so that its front edge is at the start of the control panel curve. Players could be injured if the pod is installed too far to the rear (i.e., too close to the monitor). Carefully follow the markings on the template printed near the end of this chapter.

To assemble the control panel, you need a copy of the control panel installation template (printed near the end of this chapter) and the following parts from the kit:

- Clear cover for the control panel
- Control panel decal
- Two snap-action switches
- Two "BOOST" buttons
- One X-Y steering control
- Four #10-24 x 1-inch-long carriage bolts, flat washers, and locknuts
- Four #1/4-20 x 1-inch-long carriage bolts, fender washers, and locknuts

1. Measure your control panel to find out what size the decal and cover should be. Cut the control panel decal and cover to fit.
2. Clamp the control panel cover to the control panel.
3. Drill four corner holes through the control panel and the control panel cover. Use a 1/4-inch drill bit.
4. Install four carriage bolts and locknuts through the holes to hold the cover and the control panel together.
5. Cut the holes in the cover and panel using a 1 3/16-inch hole cutter for the button holes, a 1/8-inch hole cutter for the button tabs, and a 1 3/4-inch hole cutter for the X-Y steering control connector. Use a 5/16-inch drill bit to drill the mounting holes for the X-Y control bracket.

WARNING

Wear safety glasses when drilling the plastic control panel cover. Use care to avoid shattering or chipping the plastic.

---

6. Disassemble the control panel and the control panel cover.
7. Install the control panel decal on the control panel. Use a sharp knife and cut out the holes for the controls in the decal.
8. Install the cover on the control panel with four carriage bolts, washers, and locknuts.
9. Install the buttons and X-Y steering control. (See Figure 1-1.)

Installing the Foot Pedal

To install the foot pedal, you need a copy of the foot pedal installation template (printed at the end of this chapter) and the following parts from the kit:

- One foot pedal assembly
- Four fender washers and locknuts

1. Tape the foot pedal template to the lower right corner on the front of the game. Make sure the template is placed correctly as per the measurements printed on it.
2. Drill four 5/16-inch corner holes and a 1 3/16-inch center hole through the template.
3. Feed the pedal harness through the large, 1 3/16-inch center hole. Insert the foot pedal's threaded studs into the four small corner holes.

4. From the inside of the cabinet, install the four fender washers and locknuts onto the threaded studs of the pedal. Plug in the pedal harness connector.

Connecting the JAMMA Harness

1. If your game does not already have a JAMMA harness, install the JAMMA harness in the cabinet.
2. Install the split beads on the harness as close to the PCB edge connector as possible. Hold the beads on the harness with the tie wraps included in the kit.

CAUTION

You must install the split beads included in the kit on the JAMMA harness to meet FCC requirements.

3. Using Table 1-3, *JAMMA Pin and Wire Connections,* for wiring information, connect the JAMMA

Table 1-3 JAMMA Pin and Wire Connections

Pin	Wire Color	Signal	Instructions
Component Side			
1	BN	GND	Connect to the 5V RTN (GND) terminal on the power supply. However, if you have 12V RTN, connect *one* of the BN wires at pin 1, 2, A, or B to the 12V RTN terminal.
2	BN	GND	Same as pin 1.
3	R	+5V	Connect to the +5V terminal on the power supply. However, if your power supply has a +SENSE terminal, connect *one* of the R wires at pin 3, 4, C, or D to +SENSE instead of +5V.
4	R	+5V	Same as pin 3.
5	OR	–5V	Connect to the –5V terminal of the power supply.
6	Y	+12V	Connect to the +12V terminal of the power supply. If your coin counter(s) require 12V, also connect to the + side of the coin counter(s).
7		**Key**	
8	BU/W	COIN CTR 1	Connect this wire to one side of the 12V coin counter. *Note: Do not use 24V counters.* If your counter requires 5V, connect a wire from the +5V terminal on the power supply.
9		Not used	
10	BN	SPKR +	Connect to the + terminal on the speaker. (This wire is part of a twisted pair.)
11		Not used	
12	R	RED	Attach to the video display.
13	BU	BLUE	Attach to the video display.
14	BK	VIDEO GND	Attach to the video display.
15	W	SELF-TEST	Use this wire if you want an external self-test switch. However, the kit already has a self-test switch on the PCB. *(If you connect an external self-test switch, switch off the switch on the PCB. Connect the wire to the N.O. terminal on the external self-test switch. Connect the common terminal of the switch to a BK/W wire (GND).)*
16	Y	LT COIN	Connect to the N.O. terminal of the left coin switch. Connect the common terminal of the switch to a BK/W wires.
17		Not Used	
18	W/BN	RT TRIGGER	
19	W/R	LT TRIGGER	
20	W/OR	RT THUMB	
21	W/Y	LT THUMB	
22	W/GN	BOOST	Connect both boost buttons to this pin.*
23		Not used	
24		Not used	

**The boost light is attached to a blue wire on a separate inline connector on A130, not on the JAMMA connector. The chip is at J/L pin 2.*

Table 1-3 JAMMA Wire Connections, Continued

Pin	Wire Color	Signal	Instructions
25	W/GY	Not used	
26	V	Not used	
27	BK/W	GND	Connect one of the BK/W wires at pin 27, 28, e, and f to the negative sense terminal of the power supply (if it exists) and one to the common terminals of the coin switches. Connect two of these wires to the common terminals of the control switches on the control panel.
28	BK/W	GND	Same as pin 27.
Solder Side			
A	BN	GND	Connect to the 5V RTN (GND) terminal on the power supply. However, if you have 12V RTN, connect *one* of the BN wires at pin 1, 2, A, or B to the 12V RTN terminal.
B	BN	GND	Same as pin A.
C	R	+5V	Connect to the +5V terminal on the power supply. However, if your power supply has a +SENSE terminal, connect *one* of the R wires at pin 3, 4, C, or D to +SENSE instead of +5V.
D	R	+5V	Same as pin C.
E	OR	–5V	Connect to the –5V terminal of the power supply..
F	Y	+12V	Connect to the +12V terminal of the power supply.
H		**Key**	
J	V/W	COIN CTR 2	Connect this wire to one side of the second 12V coin counter. Clip R13 on the JSA Audio II PCB if you use a second coin counter. *Note: Do not use 24V counters.* If your counter requires 5V, connect a wire from the +5V terminal on the power supply. Also clip R13 on the game PCB.
K		Not used	
L	W	SPKR–	Connect to the – terminal on the speaker. (This wire is one of a twisted pair.)
M		Not used	
N	GN	GREEN	Attach to the video display.
P	BN	$\overline{\text{COMPSYNC}}$	Attach to the video display.
R	GY	Service	
S		Not used	
T	OR	RT COIN	Connect to the N.O. terminal of the right coin switch. Connect the common terminal of the switch to a BK/W wire.
U		Not used	
V	Y/BN	FLY UP/DOWN	Connect to the wiper of the up/down potentiometer on the steering control. (Goes to the A-to-D input.)
W	Y/R	STEER L/R	Connect to the wiper of the right/left potentiometer on the steering control. (Goes to the A-to-D input.)
X		Not used	
Y	Y/W	FOOT PEDAL	(Goes to the A-to-D input.)
Z		Not used	
a		Not used	
b		Not used	
c		Not used	
d		Not used	
e	BK/W	GND	Connect one of the BK/W wires at pin 27, 28, e, or f to the negative sense terminal of the power supply (if it exists) and one to the common terminals of the coin switches. Connect two of these wires to the common terminals of the control switches on the control panel.
f	BK/W	GND	Same as pin e.

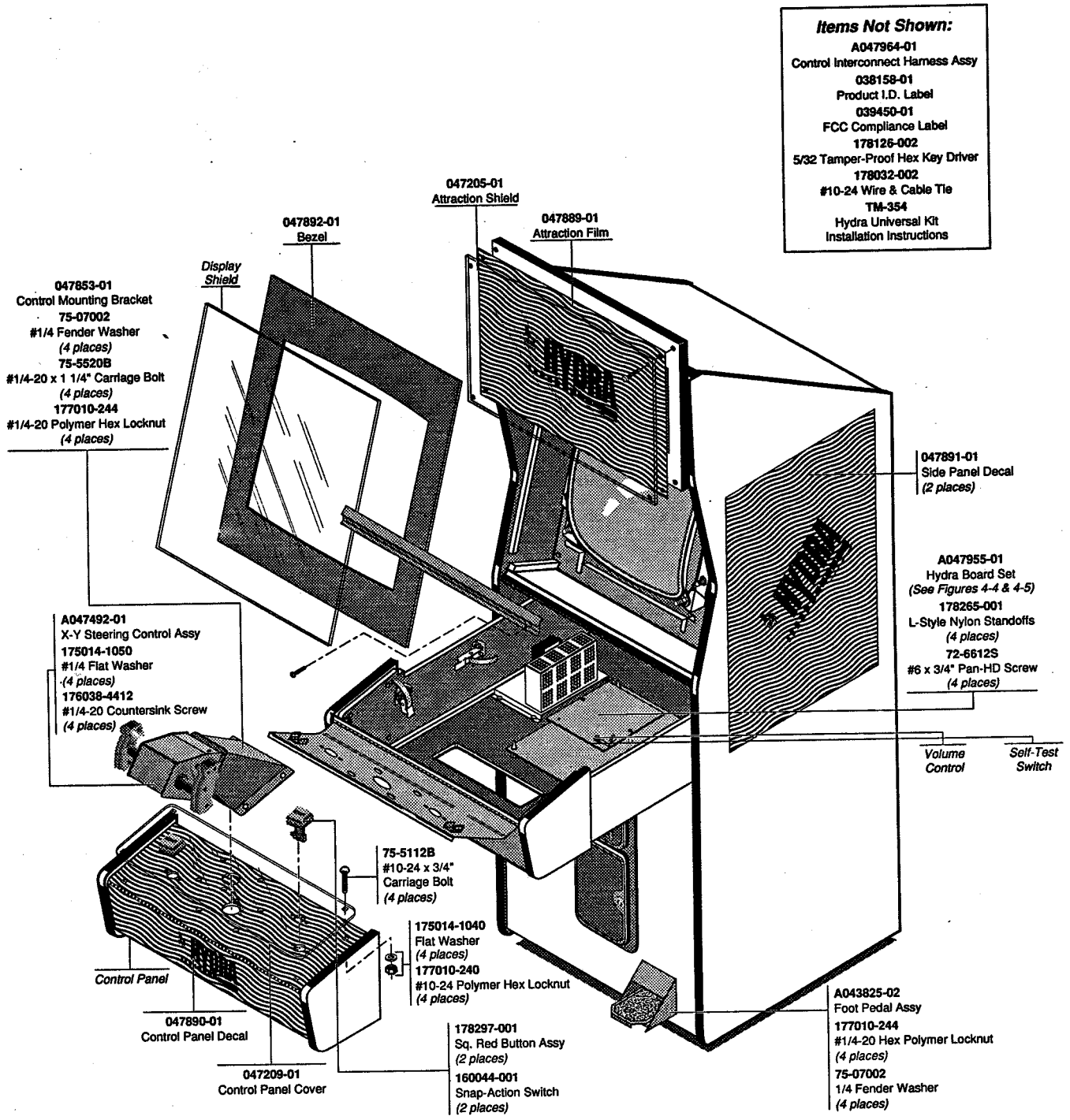

Control panel in closed position

Figure 1-1 Hydra Kit Parts Installed in Cabinet

harness to existing component harnesses. Use crimp splices or butt soldering.

WARNING

Do not simply tie the wires together. If you do, you could cause intermittent problems, loose connections, oxidation, or a fire.

Connecting Power Wires

1. Connect the wires on the JAMMA harness to the wires for the power supply, as shown in Table 1-3. The Hydra kit requires +5V and +12V. If -5V is available, it should be used too. Tie off any other voltage wires on the power supply besides +5V, –5V, and +12V.
   There is more than one wire for each voltage in the JAMMA harness. Use more than one wire for each voltage (connecting them as described in Table 1-3) so that the edge connector does not overload and burn.

Connecting Video Display Wires

NOTE

The JAMMA harness provides only negative composite sync. If your video display requires separate positive sync, see Chapter 3 for alternative wiring.

Connect the wires designated for the red, green and blue video guns along with the sync and ground wires, according to Table 1-3.

Connecting Coin Door Wires

1. Connect the wires on the JAMMA harness to the coin switches and meter according to Table 1-3.
2. Connect one terminal of the door lamps to one of the BK/W wires. Connect the other terminal of the door lamps to the R wire supplying +5V.

NOTE

***Do not** use –5V for the coin door lamps. –5V is required for audio.*

(Some games have separate power supply outputs for the coin door lamps. If you choose to use these outputs, make sure you connect both terminals of each lamp to the terminals on the power supply.)

Connecting the Control Wires

Connect the joystick harnesses and the button harnesses to the JAMMA harness according to the information in Table 1-3.

Grounding the Cabinet

Find the ground lead (green) of the 115V input power line. Connect this lead in daisy-chain fashion to a bare metal part of the coin door, the control panel, the video display, and the power supply. This AC ground must be of #18 AWG wire or larger.

WARNING

*For the safety of players, you **must** connect the green ground wire as indicated above.*

Checking the JAMMA Connections

Before plugging in the game PCB, turn on the power to the game, and check +5 Volts on pins 3, 4, C, and D of the JAMMA connector; +12 Volts on pins F and 6; and –5 Volts on pins E and 5.

Check that the video display and the attraction lamp have power. Now turn off the power to the game.

Installing the Hydra Game PCB

1. After you have checked the power on the JAMMA connector, above, install the Hydra game board set in the cabinet. Use the nylon standoffs and four #6-32 screws in the kit.

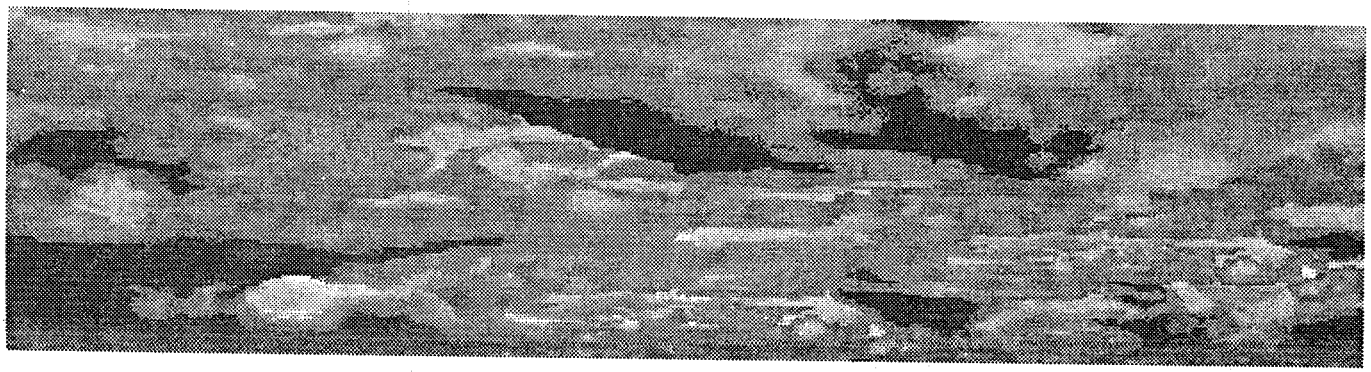

2. Connect the JAMMA connector to the PCB.
3. Secure the JAMMA harness away from the PCB with cable ties.
4. Turn on the power to the game. Check that the game PCB functions. If a video picture is not present, see Chapter 3.

Installing the Bezel, Labels, Decals, and Attraction Assembly

The kit parts are shown assembled in a cabinet in Figure 1-1.

Installing the Display Bezel

Find the cardboard display bezel (part no. 047892-01). This bezel can accommodate both 19-inch and 25-inch video displays. Follow the instructions on the back of the bezel, and cut the hole and outside edges as required.

Installing the Product ID and FCC Label

Place the product ID label (part no. 038158-01) and FCC label (part no. 039450-01) on the back of the cabinet.

Installing the Side Panel Decals

Find the side panel decals. Wet the left and right side panels of the cabinet with slightly soapy water. Then position the decals as shown in Figure 1-1. Remove any wrinkles in the artwork using a squeegee. Allow the sides to dry.

Installing the Attraction Assembly

Find the Hydra attraction shield and the attraction film. Using the existing shield as a template, cut the shield and film to size, if necessary. Install them on the cabinet as shown in Figure 1-1.

Setting the Coin and Game Options

Set the coin and game options in the self-test. See Chapter 2 for information about the option settings.

Game Play

This section of the manual describes the theme of the Hydra game and the game play features.

Introduction

You are the HYDRA, a courier for hire. You are a highly-paid specialist who delivers cargo to remote locations across the globe. World powers seek you out for dangerous assignments that only you can accomplish. Your toughest competitor, The Shadow, is always on your tail waiting to pick up cargo that you lose. You pilot the "Hydracraft," a customized boat which can boost itself into the air. Your goal is to remain the top-paid courier in the world and live long enough to earn sufficient money to retire in luxury.

Game Play

Hydra controls consist of an accelerator pedal, boost buttons to launch the Hydracraft into the air, and Atari's custom flight controller. On the flight control, the left thumb button is used to select a special weapon from the player's arsenal, the right thumb button activates the special weapon, and the trigger buttons fire the laser cannons. The handles control the altitude of the Hydracraft while in flight.

The player can start on novice (mission one), intermediate (mission three) or advanced (mission five). Extra fuel, weapons and points are awarded for starting at a higher level.

There are a total of nine different missions for the player to complete; each mission has a number of sectors depending upon the level of difficulty. The player must avoid and shoot enemy patrols while picking up fuel and boost crystals along the way. The missions take the player all over the world to exotic places like Baja California, the North Sea, Cuba, Casablanca, Central China, Libya, and more.

The player must deliver nine different top-secret cargos while combating the enemy. The player is "paid" to deliver a mutant virus, the recovered crown jewels, a nuclear device, a spy satellite, laser rifles, a space station, mutant killer bees, a mad scientist, and a doomsday device. Enemy forces include zeppelins, helicopters, mines, patrol boats, hydrofoils, Hovercrafts, armored boats, jet fighters, and half-tracks, among many others.

Between missions, the player enters the Hydradome bonus round. In this wave of game play, the player drives through fuel gates and over jump ramps and through rings of fire to collect cash balloons while landing on targets for bonus. Cash earned during game and bonus waves can be used to purchase special weapons.

In the last mission, the player must dispose of a doomsday device before it explodes and destroys the world. There is an extravagant end-of-game sequence when the Hydra deposits the bomb into an active volcano where it explodes. Hydra then comes fact-to-face with his arch rival, the Shadow. If the player completes the last mission, the identity of the Shadow is revealed.

The player can buy special weapons with cash earned and money bags collected during game play or by adding coins to the cash box. Special weapons include the uzi, six-way shield, nuke, flamer, anti-gravity, homer, and bombs. Players can also purchase additional fuel in Ziggy's weapons shoppe.

Install this boost button (one of two) in the upper left and upper right corners of the control panel, as shown in Figure 1-1.

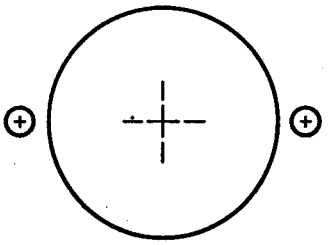

BOOST BUTTON

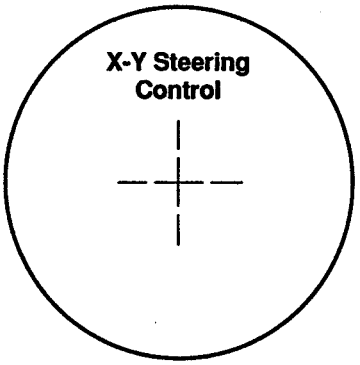

WARNING

The pod for the X-Y steering control must be installed so that its front edge is at the start of the control panel curve. Players could be injured if the pod is installed too far to the rear (i.e., too close to the monitor).

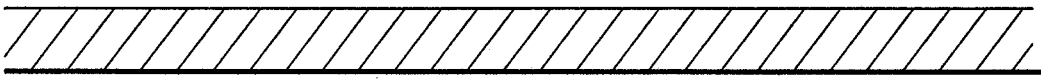

X-Y STEERING CONTROL

N O T E S

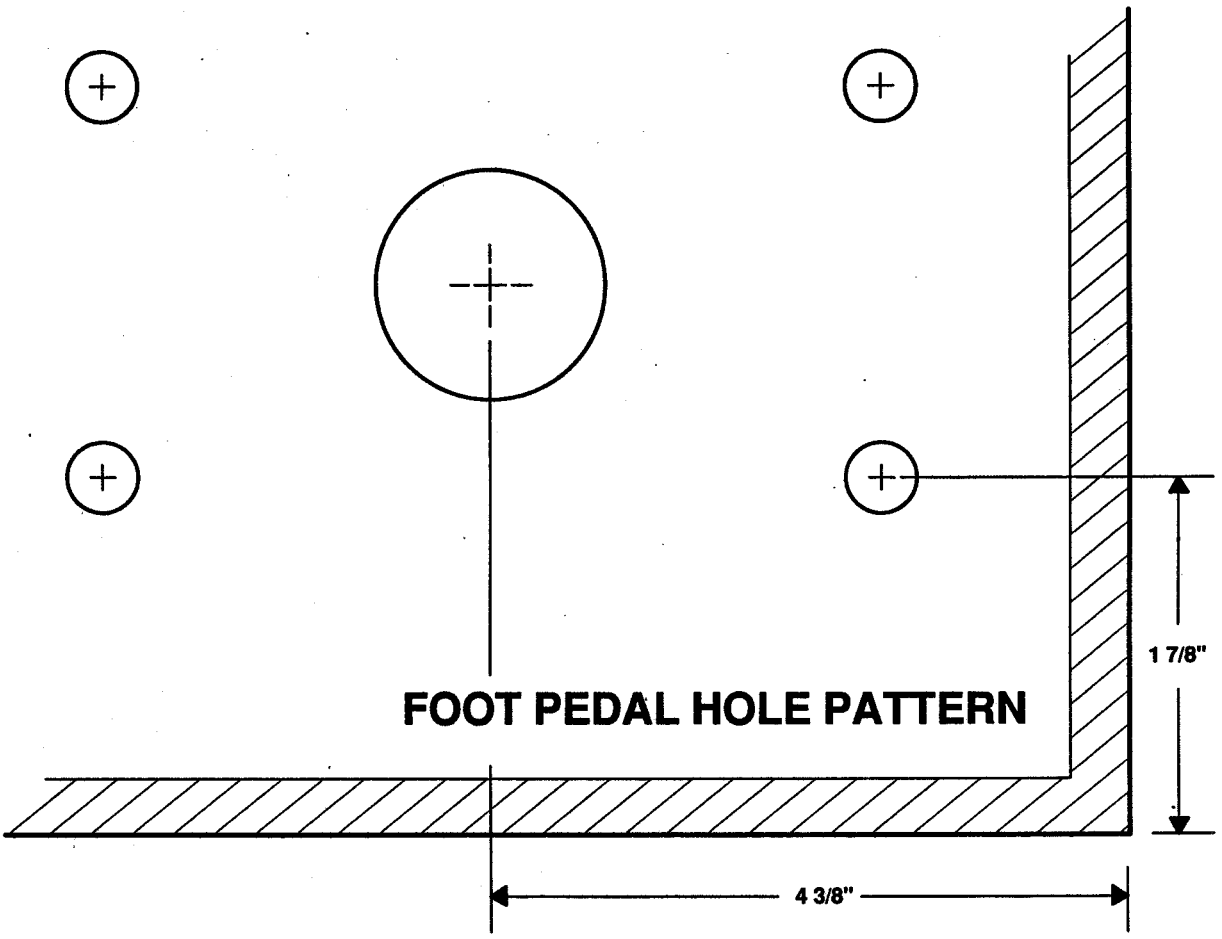

FOOT PEDAL HOLE PATTERN

N O T E S

CHAPTER 2

Self-Test

Use the Hydra self-test to check the condition of the game circuitry and controls. You will see the self-test information on the video display and hear the sound test information through the speakers. You do not need any additional equipment to perform the self-test. Perform the self-test when you first set up the game, each time you collect the money, or when you suspect game problems. This chapter shows the screens in the self-test and explains each of the tests. The screens and explanations are arranged in the order they appear in the self-test. Table 2-3 lists all the self-test screens and their purposes.

RAM and ROM Test

When you turn on the power, the game automatically runs through the random-access memory (RAM) and read-only memory (ROM) test. This test is *not* part of the self-test procedure. Regardless of whether or not the game has a problem, it will always advance to the attract mode. The game will stop only if you power it up and the self-test switch has been previously turned on.

Game RAM Test

No message appears while the test is checking the RAMs (this takes about half a minute). If more than 30 seconds elapse and the self-test menu doesn't appear, the game has a problem. See Table 2-1 for the locations of bad RAMs. If the test finds no RAM errors, no message appears and the program goes to the ROM test after four seconds.

Game ROM Test

If the test finds no ROM errors, no message appears and the program goes to the title screen in the attract mode. If a ROM fails, a message is displayed. Furthermore, if the failed ROM is a program ROM, then the error number with checksums is shown in the center of the screen. The ROM error test takes a few seconds. See Table 2-2 for the location of bad ROMs.

If you think you have a ROM error, but the screen shows no messages, see Table 3-3 for information about the locations of various ROM functions.

Depending on how bad the ROM error is, you may not be able to enter the self-test.

Entering and Exiting the Self-Test

To enter the self-test, turn on the self-test switch on the JSA Audio II PCB (next to the volume control). Doing so displays the select test menu (entitled "Self Test"); see Figure 2-1. Exit the self-test by turning off the self-test switch at any time.

Table 2-1 Bad RAM Location by Error Address

Error Address	RAM Location High	Low
FE8000 (Color RAM)	45D	45C
FF0000 (Video RAM)	35J	25J

Table 2-2 Bad ROM Location by Error Address

Error Address	RAM Location High	Low
000000	5D	5B
020000	15D	15B
040000	20D	20B
060000	30D	30B

Table 2-3 Summary of the Self-Test Screens

- Select Test Menu (entitled "Self Test")
- Statistics
- Coin Options
- Game Options
- Alpha(numeric) Test
- Motion Object Test
- Switch Test
- Playfield Test
- Color RAM Test
  - First Color Bar Test
  - Second Color Bar Test
  - Red Color Purity
  - Green Color Purity
  - Blue Color Purity
  - White Color Purity
  - Grey Color Purity
- Convergence Test
  - Black Convergence
  - Violet Convergence
  - Green Convergence
  - Blue Convergence
  - White Convergence
- Sound Test

Select Test Menu

Choose which test or screen you want to see from this menu, shown in Figure 2-1. Move up and down the menu using the left or right trigger button. Start the selected test by pressing either boost button.

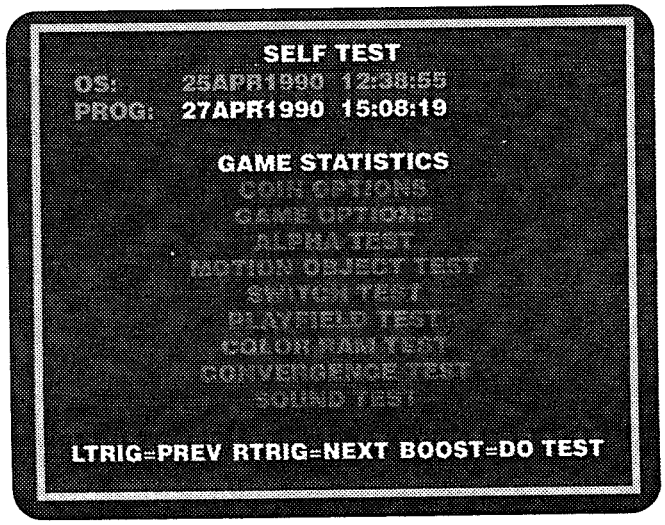

Figure 2-1 Select Test Menu Screen

Statistics

Use the information shown on the statistics screen (see Figure 2-2) to keep track of your game use and maximize your profits. Record the information on the Hydra statistics page in the back of this manual.

The statistics are collected from the last time the statistics were cleared. You can clear the statistics by pressing the trigger and thumb buttons all at once. The statistics are as follows:

- *Left Coins* shows the number of coins counted in the left coin mechanism.
- *Right Coins* shows the number of coins counted in the right coin mechanism.
- *New Games* shows the number of unique games played. A unique game is counted every time a player starts a new game (not a continued game).
- *Continuation* shows the number of games that players continued.
- *Free Games* shows the number of free games played. This statistic can help operators detect and monitor excess use of free games.
- *Novice* is the number of games started at the "easy" level.
- *Intermediate* is the number of games started at the "medium" level.
- *Advanced* is the number of games started at the "hard" level.
- *Idle Time* is the number of minutes the game was idle or not being played.
- *Active Time* is the number of minutes the game was played by anyone.
- *Error Count* shows the number of errors counted in the erasable memory. If you have an error count, the statistics may be wrong. If you consistently have errors counted for several weeks, replace the EEROM at 30E on the Hydra game PCB.
- *Total Credits* is the number of credits accumulated by the game.
- *Bought Coins* is the number of coins used to "buy" weapons in the shop.
- *Total Coins* is the total number of coins registered by the game.
- *Average Time per Credit* is displayed in seconds.
- *Average Time per Coin* is also displayed in seconds.

Press either boost button to leave this screen and go to the histograms. The seven histograms (bar graphs) are as follows:

- *Histogram 1—Level died at 1A–6D* shows how many players "died" at any of the levels from 1A to 6D.
- *Histogram 2—Level died at 7A–9F* shows how many players "died" at any of the levels from 7A to 9F. In addition, the end of this histogram has the line "FIN" for the number of players who finished the game.
- *Histogram 3—Level continued from 1A–6D* shows how many players continued a game from the levels 1A to 6D.
- *Histogram 4—Level continued from 7A–9F* shows how many players continued a game from the levels 7A to 9F.
- *Histogram 5—New game times* shows how many seconds all new games lasted.
- *Histogram 6—Continued game times* shows how many seconds all continued games lasted.
- *Histogram 7—Weapons bought* shows how many of each "weapon" players purchased in the game.

Press either boost button to leave this screen and go to the select test menu.

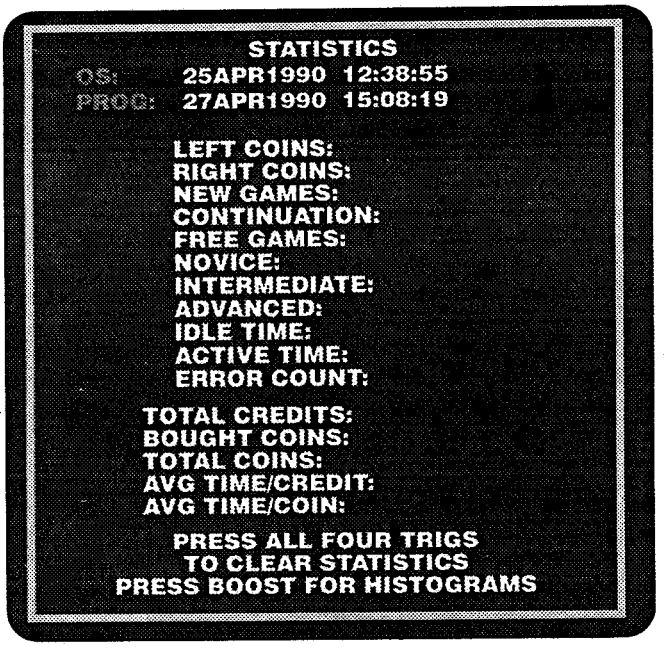

Figure 2-2 Statistics Screen

Coin Options

Check and select the coin options on this screen, shown in Figure 2-3. The screen shows the factory default settings in green.

To move through the options, to change or save the settings, or to return to the select test menu, follow the instructions shown at the bottom of the screen. The

coin option settings, with defaults, are shown and explained in Table 2-4.

Game Options

Check and select the game options on this screen, shown in Figure 2-4. The screen shows the factory default settings in green.

To move through the options, to change or save the settings, or to return to the select test menu, follow the instructions shown at the bottom of the screen.

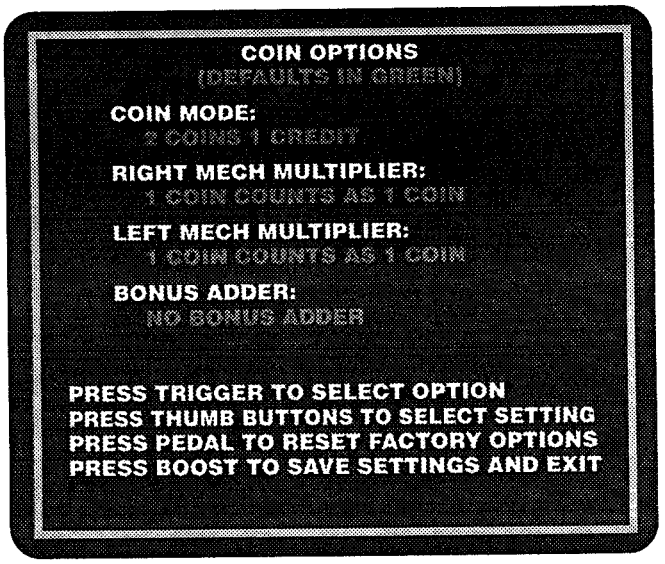

Figure 2-3 Coin Options Screen

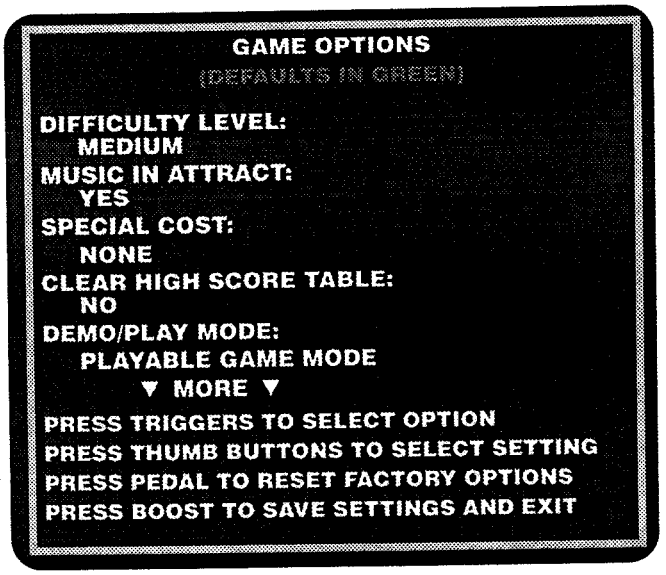

Figure 2-4 Game Options Screen

NOTE

Press the right trigger button to scroll down through the options, and the left trigger button to scroll up.

The game options, with defaults, are shown and explained in Table 2-5.

Alphanumeric Test

The alphanumeric test, shown in Figure 2-5, checks the condition of the alphanumerics in the game. If you

Table 2-4 Coin Option Settings

Option	Available Settings	Explanation
Game Price	1 coin 1 credit ✦ 2 coins 1 credit 3 coins 1 credit 4 coins 1 credit	The number of coins required for one credit.
Right Mech Multiplier	1 credit counts as 1 coin ✦ 1 credit counts as 4 coins 1 credit counts as 5 coins 1 credit counts as 6 coins	The number of coins each coin counts as in the right coin mechanism.
Left Mech Multiplier	1 credit counts as 1 coin ✦ 1 credit counts as 2 coins	The number of coins each coin counts as in the left coin mechanism.
Bonus Adder	No bonus adder ✦ 2 coins give 1 extra coin 4 coins give 1 extra coin 4 coins give 2 extra coins 5 coins give 1 extra coin 3 coins give 1 extra coin Free Play (for demonstration mode)	Lets you choose bonus coins, no bonus, or free play.

✦ *Manufacturer's recommended settings*

Table 2-5 Game Option Settings

Option	Available Settings	Explanation
Difficulty Level	Easiest, Easier, Easy, Medium ✦, Medium Hard, Hard, Harder, Hardest	
Music in Attract	Yes ✦ No	Lets you turn the sound on or off in the attract mode.
Special Cost	Yes	2 credits to start, 1 credit to continue
	None ✦	No special cost to start
Clear High Score Table	Yes No ✦	Lets you manually clear the high-score table.
Demo/Play Mode	Demonstration only mode	
	Playable Game Mode ✦	
Auto High Score Reset	Enable ✦ Disable	If set to *enable*, this option clears the high-score table periodically.

✦ *Manufacturer's recommended settings*

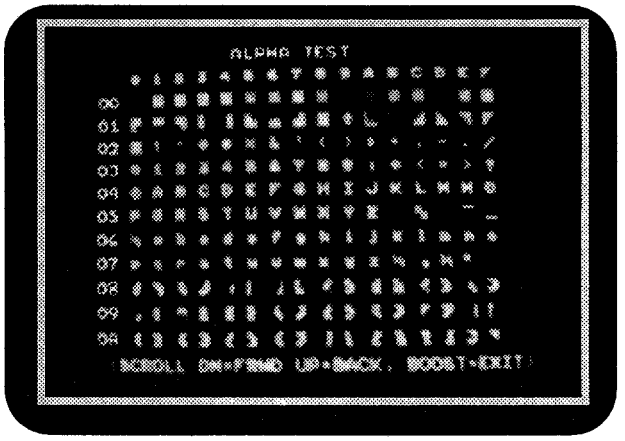

Figure 2-5 Alphanumeric Test Screen

see an error on the screen, check the EPROMs at 15L. Pressing the left and right trigger buttons pages the screen up and down; moving the control up/down scrolls up and down. Press either boost button to go to the menu screen.

Motion Object Test

The motion object test screen, shown in Figure 2-6, tests the movement and color of various game objects.

Choose an object and move it or change it as follows:

While holding down this button:	This action results:
Left trigger	Left/right and up/down steering moves the object around on the screen.
Right trigger	Up/down steering enlarges/-shrinks the object.
Right trigger	Left/right steering changes the screen to another object.
Left & right thumb	Select one of the three objects to be manipulated. Using these controls, you can display all 700 pictures used in the game.

Press either boost button to go to the select test menu.

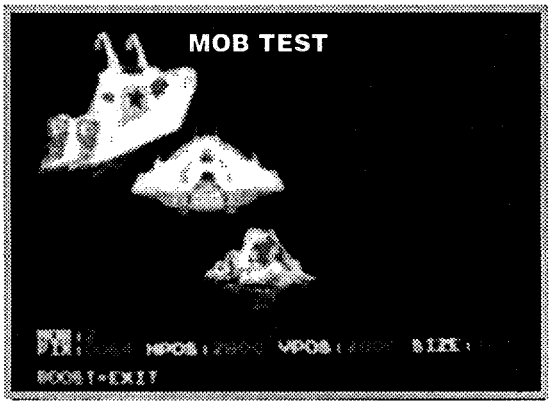

Figure 2-6 Motion Object Test Screen

Switch Test

The switch test screen is shown in Figure 2-7. Test the coin mechanisms, boost buttons, and switches in the X-Y steering control. As you use each control, white highlighting appears around its name on the screen. If the highlighting does not appear, check the connections, switches, and coin mechanisms.

To reset the limits of the X-Y control and foot pedal, press both thumb buttons simultaneously. Turn the X-Y control to the right, left, up, and down until the white numbers next to the green ones stabilize (stop changing) after each action. Also press the foot pedal and hold it until the number stops changing.

Press the two trigger buttons simultaneously to return to the menu screen.

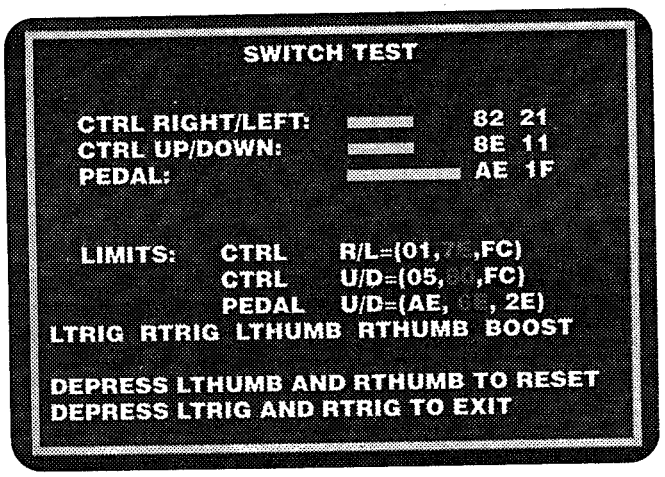

Figure 2-7 Switch Test Screen

Figure 2-8 Playfield Test Screen

Playfield Test

The playfield test screen, shown in Figure 2-8, tests the movement of the playfield.

Turn the X-Y steering control up, down, left, and right to check whether the whole picture moves accordingly. Press either boost button to go to the menu screen.

Color RAM Test

This test has seven screens, the first of which is shown in Figure 2-9. Advance to each screen by pressing either trigger button.

- The first color bar test indicates the dynamic range of the video display color circuit. The screen should show four bands (red, green, blue, and white, from top to bottom), ranging from dark to bright, left to right. The red, green, and blue bands are produced by only one color gun being turned on in each band.

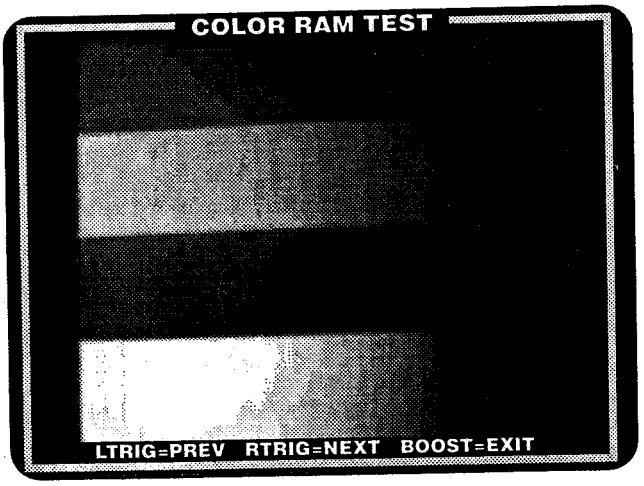

Figure 2-9 Color RAM Test Screen

- The second color bar test shows the same as the first test, but with two color guns being turned on in three bands—a yellow band (red and green guns), cyan band (blue and green guns), and magenta band (blue and red guns). At the bottom is a white band, in which all three color guns are turned on.
- The remaining five screens are color purity tests. The rectangles of color shown are red, green, blue, white, and grey.
  Each screen should display a straight rectangle of color, with no curving at the corners, no unevenness of color, and no lines in the display.

If any of these screens are not correct, adjust the video display as described in the video display manual. Return to the menu screen by pressing either boost button.

Convergence Test

The convergence test has five screens—black, violet, green, blue, and grey. The black screen is shown in Figure 2-10. To see the remaining screens, press either trigger button. Press either boost button to go to the menu screen.

Check the following on the screens:

- The grid lines should be straight within 3.0 mm and the lines should not pincushion or barrel.
- The convergence of the lines on the violet and black screens should be within 2.0 mm.

If these screens do not meet these criteria, adjust the video display as described in the video display manual.

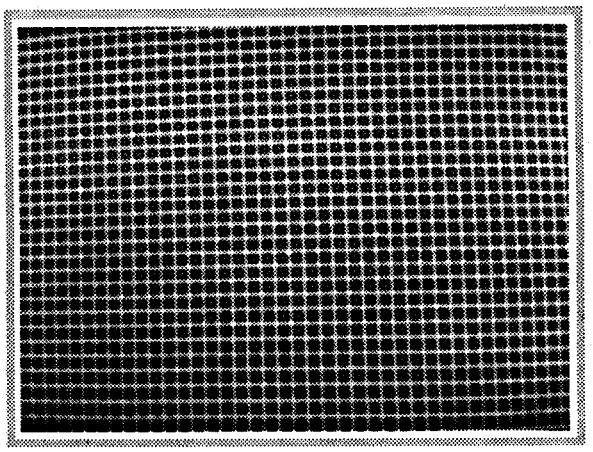

Figure 2-10 Convergence Test Screen

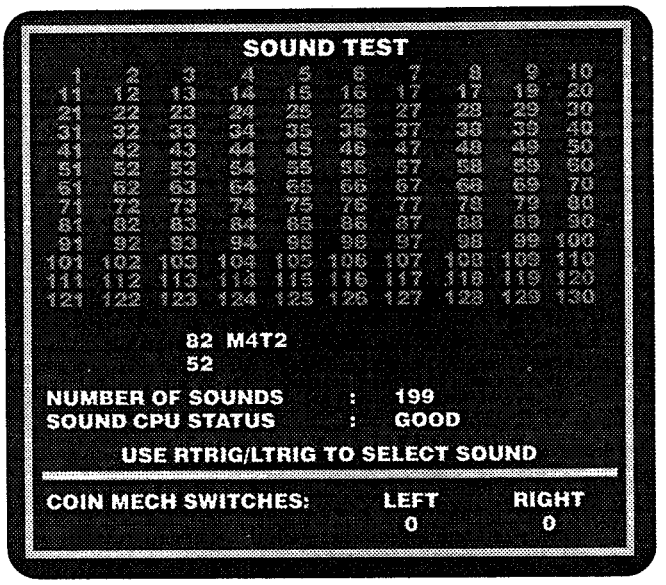

Figure 2-11 Sound Test Screen

Sound Test

The sound test indicates the condition of the sound effects circuit on the game PCB. The sound test screen appears in Figure 2-11.

Use the right or left trigger to select from the 199 sounds; press the right thumb button to listen to it and the left thumb button to stop it. (You can have numerous sounds playing simultaneously, or you can have silence, depending on which ones you select.) To select the sounds beyond number 130, watch the display in the middle of the screen, and keep pressing the right trigger button. The sound number will increment up to 233 and then start over with 1. Pressing either boost button returns you to the menu screen.

N O T E S

CHAPTER 3

Troubleshooting and Maintenance

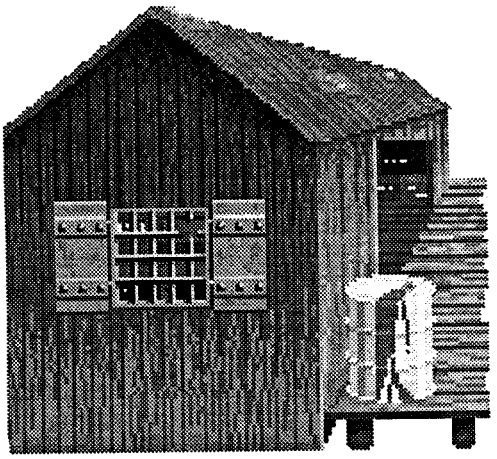

This chapter contains troubleshooting tables and repair procedures for your Hydra™ game. The chapter has two parts. The first part contains three troubleshooting tables. The first table has general troubleshooting information, the second table contains the voltage levels and test points on the game printed-circuit board, and the last table describes ROM-caused problems with specific ROMs to check and replace. The last part of the chapter has information about connecting the video display if it requires separate positive sync, repair information for the X-Y steering control and foot pedal assembly, and locations of the RAMs and ROMs on the game PCB.

Table 3-1 Troubleshooting Table

Problem	Suggested Action
Coin Mechanism Problem	1. Check the wiring to the coin mechanism. 2. Check the voltage to the + side of the mechanism. 3. Test the coin mechanisms with the sound test screen in the self-test.
Game Play Problem	1. Check the harness and connectors. 2. Perform the self-test. 3. Check the voltage levels on the PCB. See Table 3-2, *Voltage Inputs and Test Points.* 4. Check *What ROM Problems Look Like,* Table 3-3, for specific ROM problems. See Figure 3-1 for ROM locations.
X-Y Steering Control Problem, Foot Pedal Problem	1. Have the controls been lubricated with the correct type of lubricants? If not, lubricate them as shown in Figures 4-2 and 4-3. 2. Check the harnesses and connectors. 3. Check the switches on the control. 4. If you took the control apart, have you reassembled it correctly? 5. Make sure all the parts on the control are in good repair. Repair or replace parts. 6. Reset the limits on the X-Y steering control and the foot pedal.
Sound Problem	1. Is the speaker volume turned up? 2. Check the voltage on the JAMMA connector. 3. Check the wiring from the PCB to the speaker. 4. Check the voltage level to the PCB. See Table 3-2, *Voltage Inputs and Test Points.* 5. Replace the speaker.
Video Display Problem	
Sync problems.	Does your display need separate positive sync? See the *Video Display Sync Problems* section in this chapter.
Screen is dark.	1. Is the game plugged in? 2. Is the game turned on? 3. Are the connections good? 4. Is the line fuse good? 5. Is the display brightness turned up? 6. Are the solder connections on the line filter and transformer good? 7. Is the JAMMA connector on the PCB tightly connected? 8. Check all of the items below. If you answer *no* to any question, you have a problem with the video display, not with the game circuitry. See your video display service manual. a. Do you have power to the video display? b. Are the video display's filaments lit? c. Do you have high voltage to the video display? 9. Is the voltage level to the video display PCB correct? (Power voltage is 100 VAC or 110 VAC, depending on the type of video display. Video signal voltage is 0.5 to 3.5 Volts.) 10. If the level is not correct, check the connectors and the harness.
Only a colored screen appears.	You probably have a serious RAM problem. See Table 3-5, *Colored Screens Indicating Bad RAMs.*
Display area wavers or is too small.	1. Do you have voltage to the video display PCB? 2. Do you have high voltage to the video display?
Picture is wavy.	1. Is the monitor ground connected to the monitor? 2. Are the sync inputs connected properly? Does your monitor need a separate positive sync? See the *Video Display Sync Problems* section in this chapter.
Picture is upside down.	Switch the horizontal or vertical yoke wires on the display.
Convergence, purity or color problems.	Use the screens in the self-test to adjust the video display.
Picture is not centered.	Use the centering procedures in your video display manual.

Table 3-2 Voltage Inputs and Test Points on the PCB

Voltage	Test Point or LED	Source and Purpose
+5 ± 0.25 VDC	+5V1	Logic power from the switching power supply.
	CR7 LED	Lights when 5 V is applied to the PCB and the reset (RST) jumper is open.
	CR4 LED	Lights when the +12 V supply is good.
	CR3 LED	Lights when the –5 V supply is good.
+12V	+V0P (pin 4 of LM324)	+12 V from the switching power supply. Positive supply for the analog circuitry.
–5V	–V0P (pin 11 of LM324)	–5V from the switching power supply (if connected). Negative supply for the analog circuitry.

Table 3-3 What ROM Problems Look Like

Problem	ROM Causing the Problem	Check the ROM at:
Program works, but the motion objects or playfield are wrong.	Graphics	Playfield: 45M–130M. Motion Object High: 65N–130N. Motion Object Low: 65R–130R. Alphanumerics: 15L.
Garbage on screen; program doesn't work.	Processor	5C
	Program ROM 0	5D, 5B
Game program is erratic.	Program ROM 1, 2, 3	15D, 15B, 20D, 20B, 30D, 30B
No sound or erratic sound.	Audio ROM:	
	Audio Program	1B
	Audio ADPCM	7K, 7J, 7E

Video Display Sync Problems

Some video displays cannot use the composite negative sync that is on the JAMMA connector. The Hydra kit includes a standard Atari Games video connector (located at 12A) that provides separate positive sync. Refer to Table 3-4 and make the appropriate connections for your video display.

For other problems, see the video display manual that came with your game.

X-Y Steering Control

The steering control is shown in Figure 4-2. If you want to repair the X-Y steering control, disassemble it by removing it from the pod on the control panel. The hardware that secures the pod and steering control is shown in Figure 1-1.

Foot Pedal Assembly

The foot pedal assembly is shown in Figure 4-3. If you want to repair the foot pedal, disassemble it by removing it from the front of the game cabinet. The hardware that secures the foot pedal is shown in Figure 1-1.

ROMs and RAMs

If you have think you have bad ROMs or RAMs, preform the ROM or RAM test in the self-test. If you see only a colored screen and cannot enter the self-test, see Table 3-4. If you have a ROM problem, see Table 3-3. For the location of all the ROMs and RAMs on the game PCB, see Figure 4-3.

Table 3-4 Atari Games Video Connector Pin Assignments

Pin	Signal	Pin	Signal
1	Red	7	GND
2	GND	8	GND
3	Key	9	Negative composite sync
4	Green		
5	GND	10	Positive V sync
6	Blue	11	Positive H sync

Table 3-5 Screen Colors Indicating Bad RAMs

Screen Color	RAM Error Location
Red	Working RAM
Green	Playfield RAM
Blue	Motion Object RAM

N O T E S

CHAPTER 4

Parts Illustrations

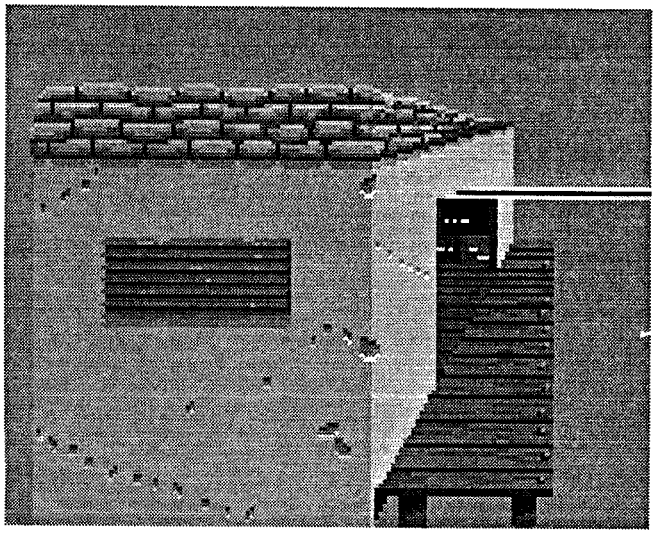

This chapter provides information you need to order replacement parts for your kit. Common hardware parts, such as screws, nuts, washers, and so on, are included in these parts illustrations. When you order parts, give the part number, part name, the number of this manual, and the serial number of your game. With this information, we can fill your order rapidly and correctly. We hope this will create less downtime and more profit from your games. Atari Games Customer Service phone numbers are listed on the inside front cover of this manual.

Figure 4-1 Hydra Kit Parts List
A048371-01 A

Part No.	Description	Qty.
72-07002	#1/4 Fender Washer	8
72-6612S	#6 x 3/4-Inch-Long, Pan-Head, Cross-Recessed Type-AB Screw	4
75-5112B	#10-24 x 3/4-Inch-Long Black Carriage Bolt	4
75-5520B	#1/4-20 x 1¼-Inch-Long Black Carriage Bolt	4
038158-01	Product I.D. Label	1
039450-01	FCC Compliance Label	1
047205-01	Attraction Panel Shield	1
047209-01	Control Panel Cover	1
047853-01	Control Panel Mounting Bracket	1
047889-01	Attraction Panel Film	1
047890-01	Control Panel Decal	1
047891-01	Side Panel Decal	2
047892-01	19/25-Inch Monitor Bezel	1
141026-001	.50-Inch I.D. Split Ferrite Bead	2
160044-001	Snap-Action Switch	2
175014-1040	#10 Flat Washer	4
175014-1050	#1/4 Flat Washer	4
176038-4412	#1/4-20 x 3/4-Inch-Long Tamper-Proof Flush-Countersunk-Cap Screw	4
177010-240	#10-24 Hex. Polymer Locknut	4
177010-244	#1/4-20 Hex. Polymer Locknut	12
178032-002	#10-24 Wire & Cable Tie	1
178126-002	5/32" Tamper-Proof Hex. Key Driver	1
178265-001	Nylon L-Style Standoff	4
178297-001	Red Square "Boost" Button With Lamp	2
A043825-02	Foot Pedal Assembly	1
A046501-01	JAMMA Harness Assembly	1
A047492-01	X-Y Steering Control Assembly	1
A047955-01	Hydra Board Set. Consists of:	1
A047896-01	Hydra Game PCB Assembly	1
A047184-03	JSA Audio II PCB Assembly	1
177000-536	#6-32 Nylon Nut	3
178278-616	#6 Threaded PCB Standoff	3
A047964-01	Interconnect Control Harness	1
TM-354	Hydra Universal Kit Installation Instructions	1

(Packaging materials are not listed)

N O T E S

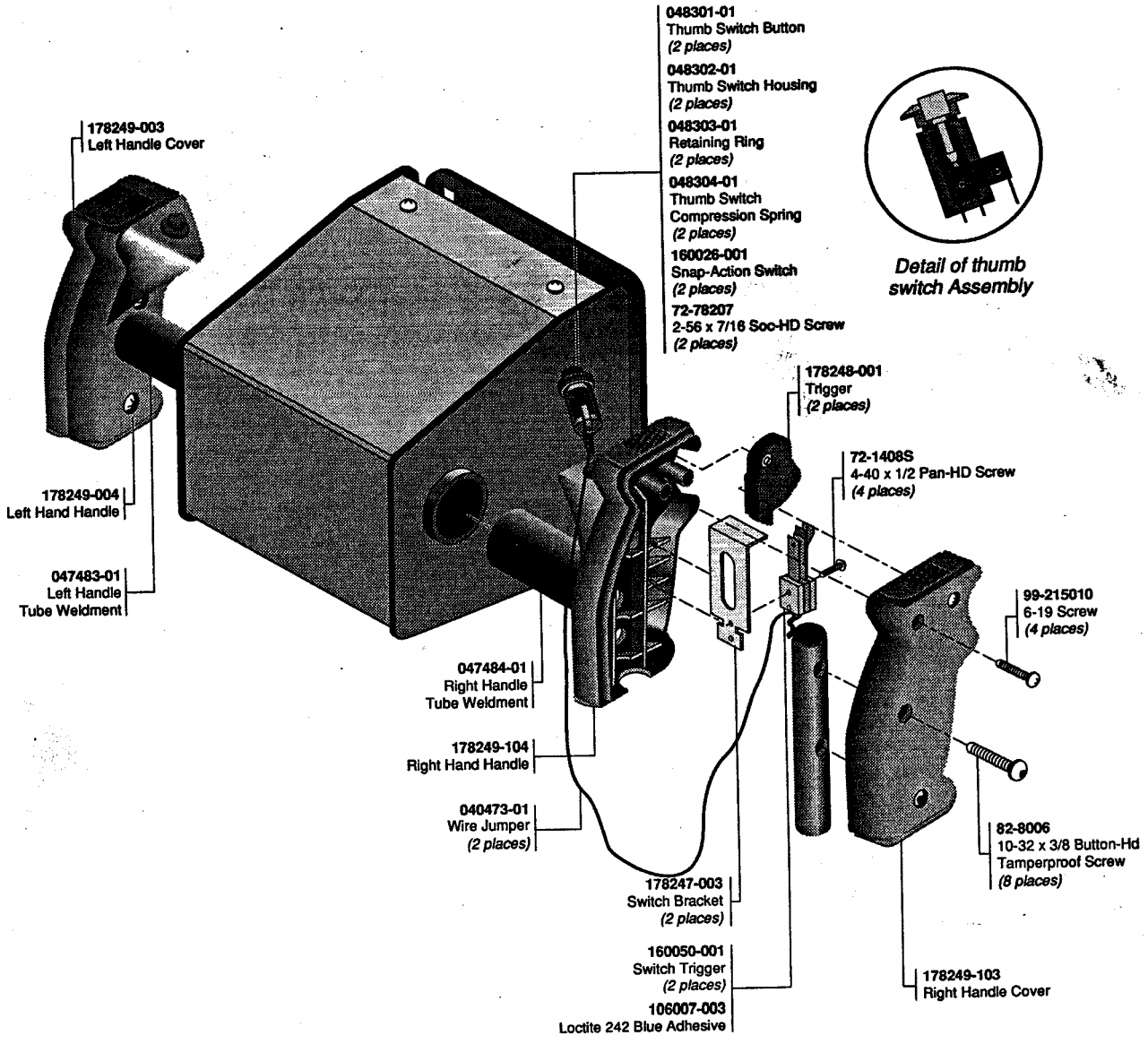

Figure 4-2 X-Y Steering Control Assembly
A047492-01 A

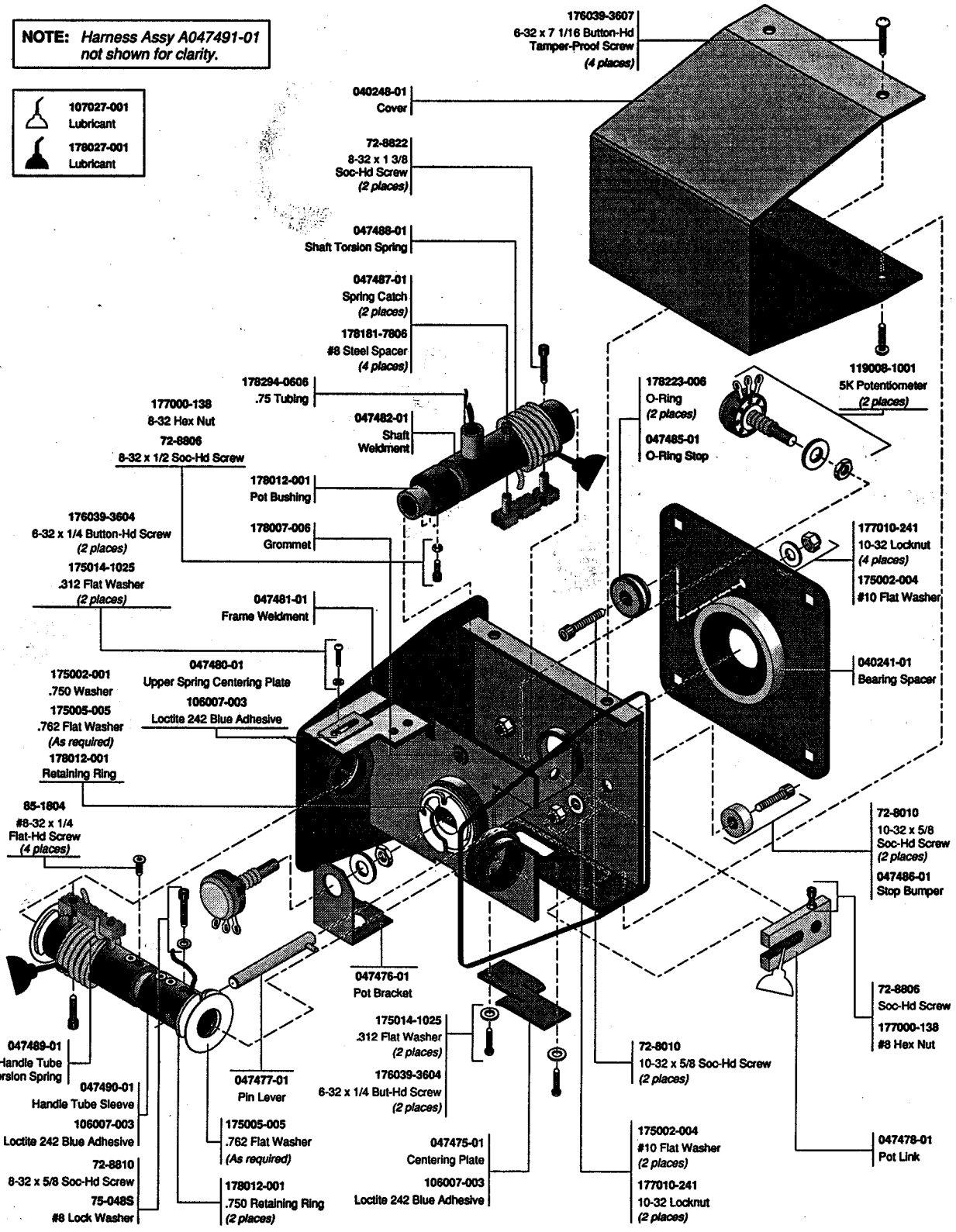

Figure 4-2 X-Y Steering Control Assembly, continued
A047492-01 A

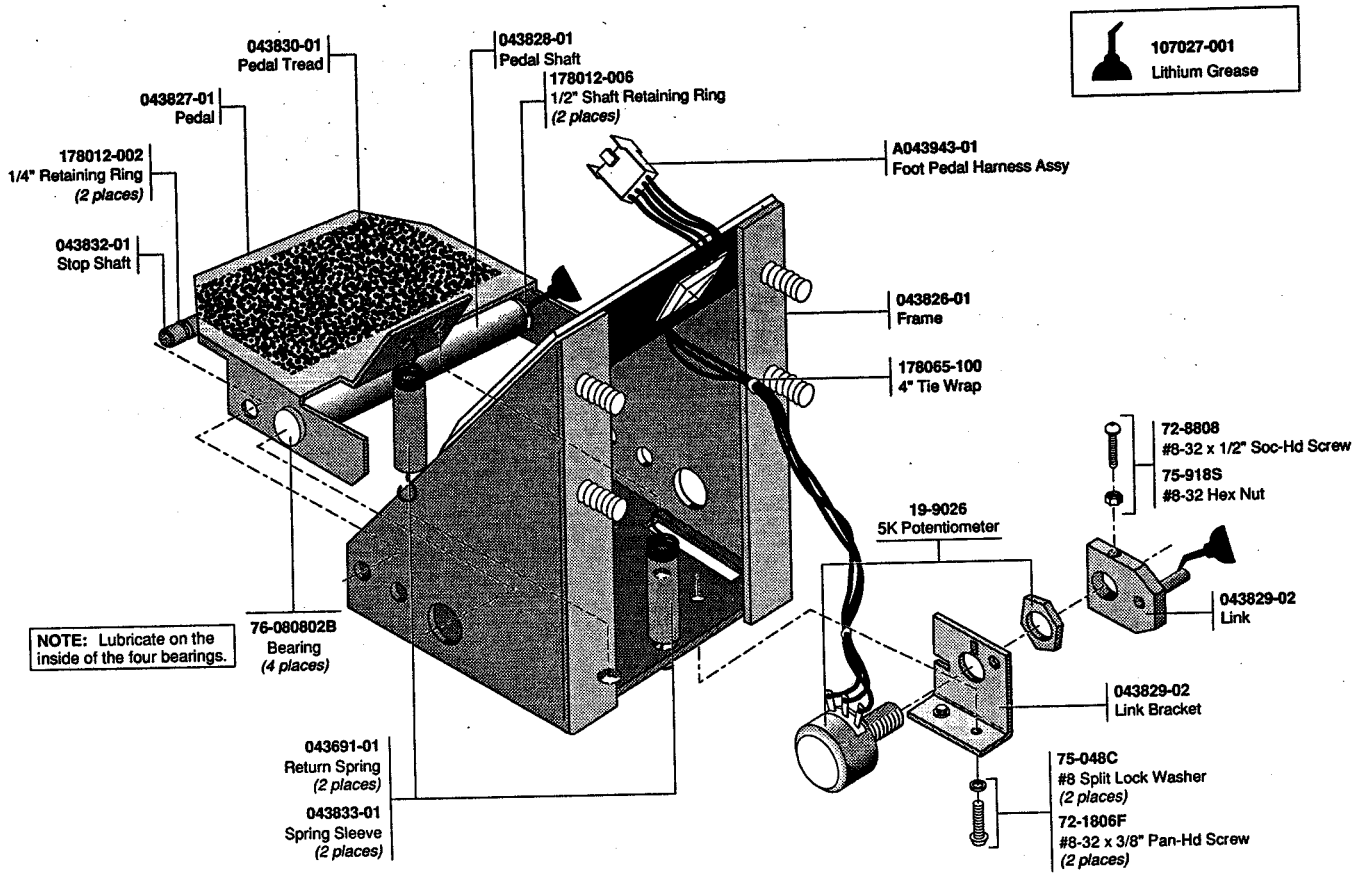

Figure 4-3 Foot Pedal Assembly
A043825-01 C

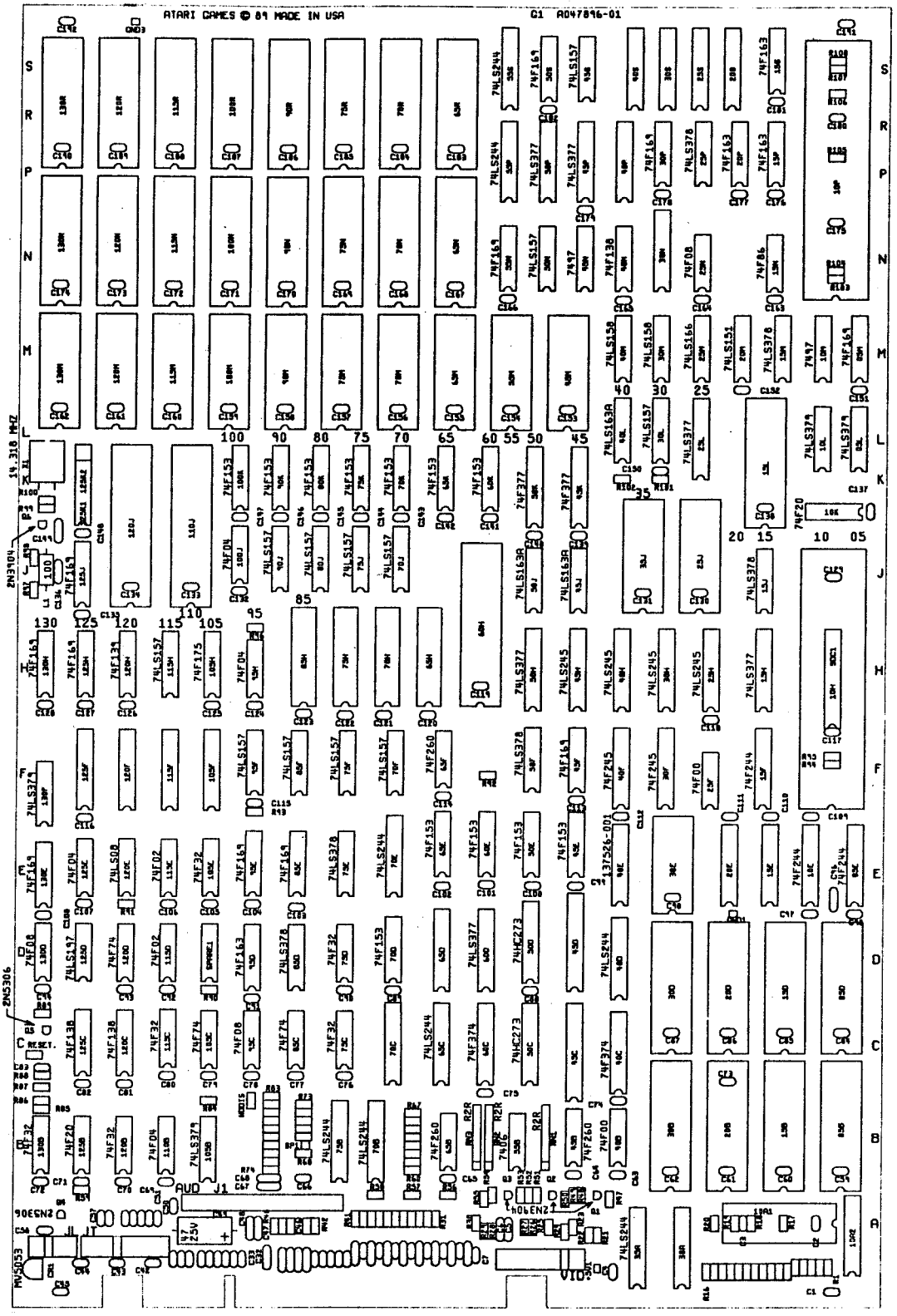

Figure 4-4 Hydra Game PCB Assembly
A047896-01 A

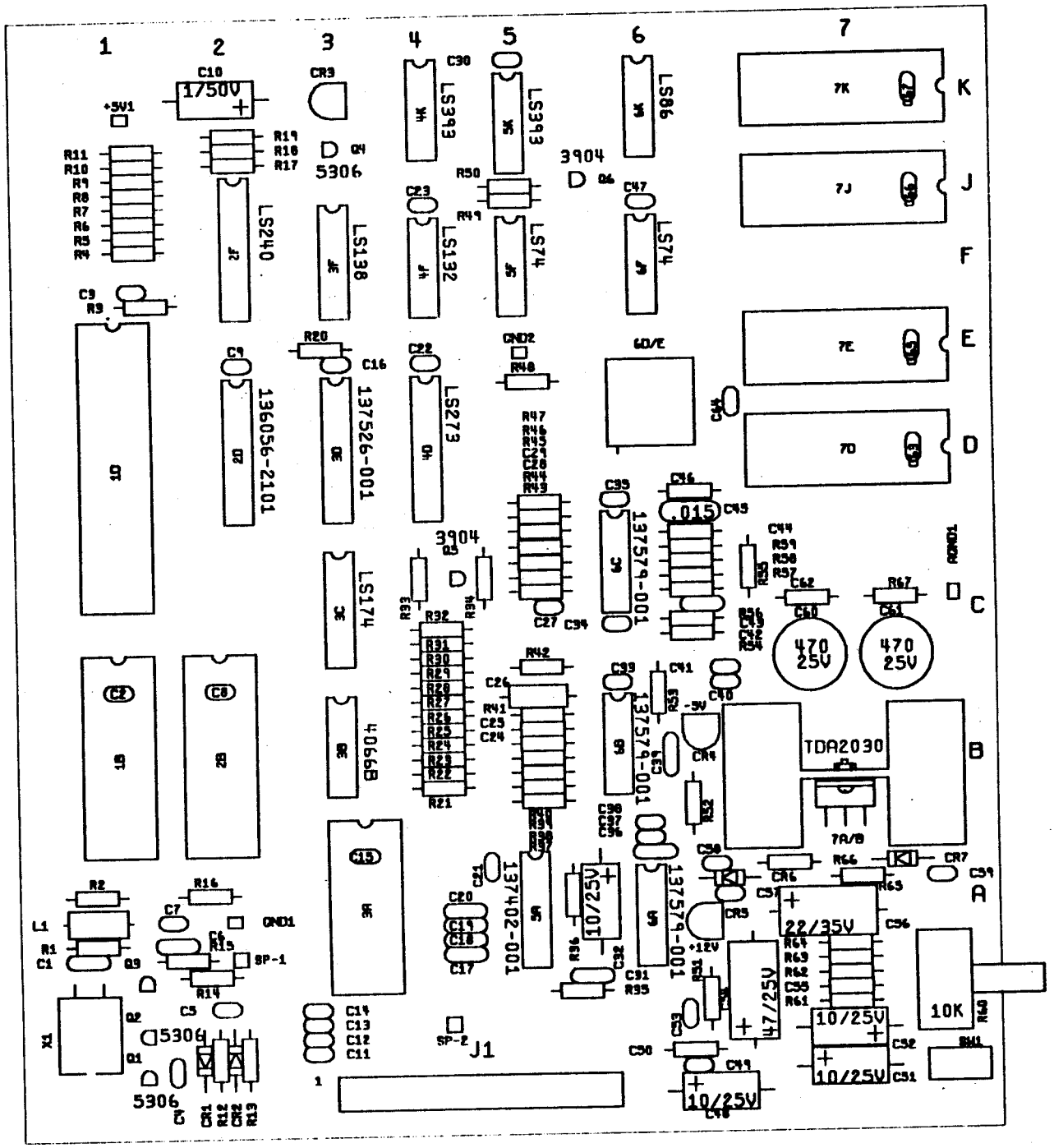

NOTES:

1. THE FOLLOWING COMPONENTS ARE NOT STUFFED:
   R1,R2,R15,R16,R41,R55,R67.
   C1,C6,C7,C44,C46,C62.
   L1,X1,Q3.

2. MODIFICATIONS TO ASSEMBLIES USING 046488-01 REV A PC BOARDS:
   ADD JUMPER BETWEEN 6B PIN 5 AND 6B PIN 10.

Figure 4-5 JSA Audio II PCB Assembly
A047184-03 A

CHAPTER 5

Schematic Diagrams

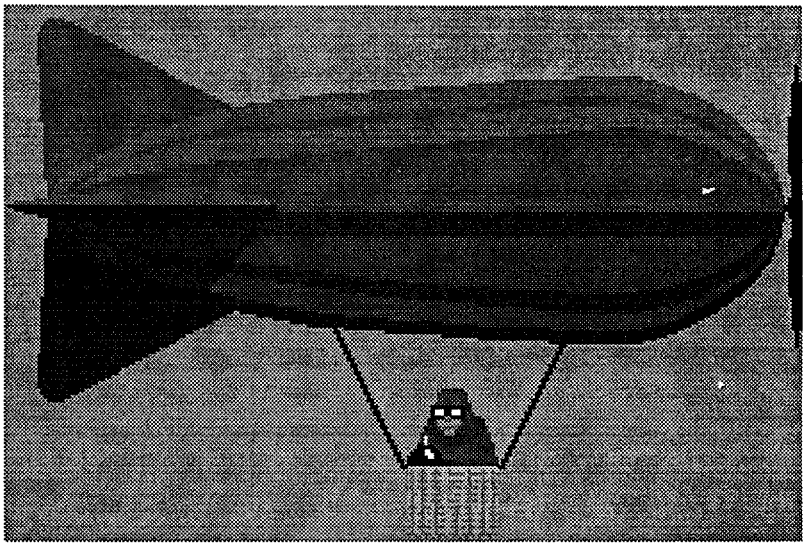

This chapter contains the schematics diagrams for your Hydra™ game PCB and the JSA Audio II PCB. In addition, the faulty RAM/ROM tables are printed at the end of this chapter. (The two board assembly drawings are illustrated in Chapter 4, Parts Illustrations.)

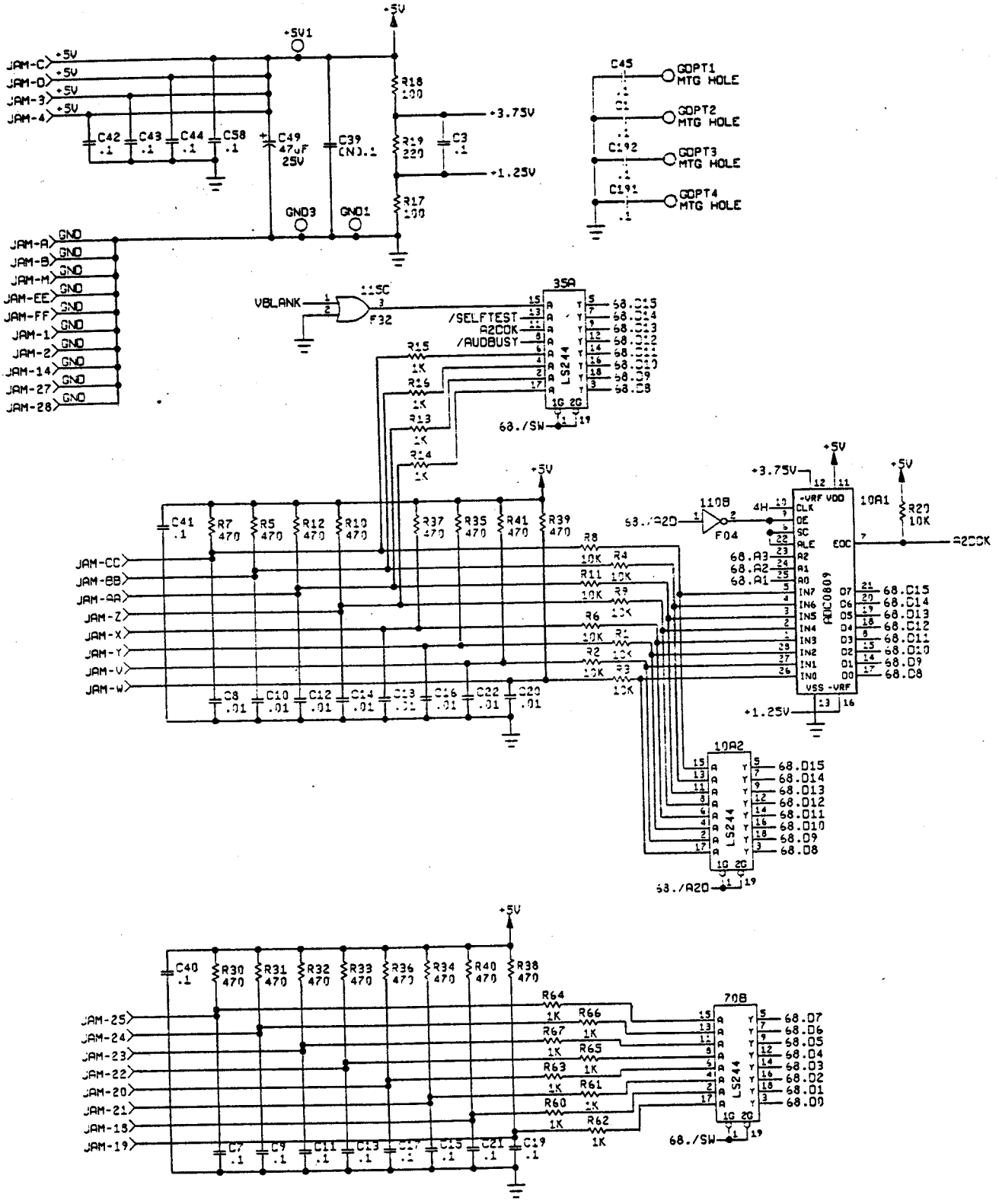
+5V
+5V1
JAM-C
JAM-D
JAM-3
JAM-4
C42 .1
C43 .1
C44 .1
C58 .1
C49 47uF 25V
C39 (NO).1
R18 100
R19 220
R17 100
C3 .1
+3.75V
+1.25V
GND3
GND1
C45 .1
C1 .1
C192 .1
C191 .1
GDPT1 MTG HOLE
GDPT2 MTG HOLE
GDPT3 MTG HOLE
GDPT4 MTG HOLE
JAM-A
JAM-B
JAM-M
JAM-EE
JAM-FF
JAM-1
JAM-2
JAM-14
JAM-27
JAM-28
GND
VBLANK
11SC
F32
3SA
LS244
/SELFTEST
A2COK
/AUDBUSY
68.D15
68.D14
68.D13
68.D12
68.D11
68.D10
68.D9
68.D8
68./SW
R15 1K
R16 1K
R13 1K
R14 1K
C41 .1
R7 470
R5 470
R12 470
R10 470
R37 470
R35 470
R41 470
R39 470
R8 10K
R4 10K
R11 10K
R9 10K
R6 10K
R1 10K
R2 10K
R3 10K
JAM-CC
JAM-BB
JAM-AA
JAM-Z
JAM-X
JAM-Y
JAM-V
JAM-W
C8 .01
C10 .01
C12 .01
C14 .01
C16 .01
C22 .01
C20 .01
+3.75V
+5V
1108
F04
68./A2D
10A1
ADC0809
-VRF VDD
CLK
OE
SC
ALE
EOC
A2
A1
A0
IN7
IN6
IN5
IN4
IN3
IN2
IN1
IN0
VSS -VRF
68.A3
68.A2
68.A1
R20 10K
A2COK
10A2
C40 .1
R30 470
R31 470
R32 470
R33 470
R36 470
R34 470
R40 470
R38 470
R64 1K
R66 1K
R67 1K
R65 1K
R63 1K
R61 1K
R60 1K
R62 1K
JAM-25
JAM-24
JAM-23
JAM-22
JAM-20
JAM-21
JAM-18
JAM-19
C7 .1
C9 .1
C11 .1
C13 .1
C15 .1
C21 .1
C19 .1
70B
68.D7
68.D6
68.D5
68.D4
68.D3
68.D2
68.D1
68.D0

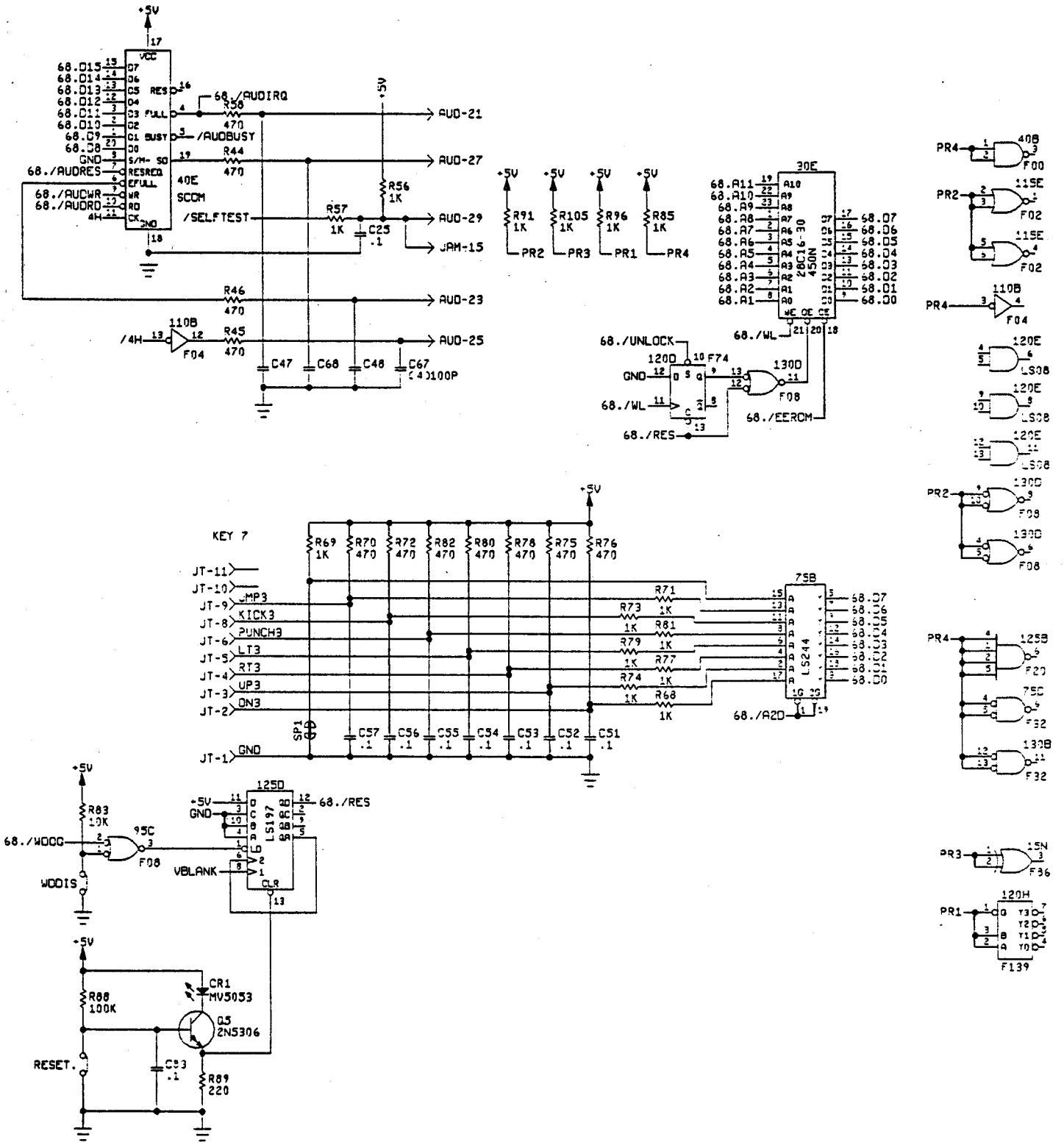

Figure 5-1 Hydra Game PCB Assembly Schematic Diagram

045977-01 A

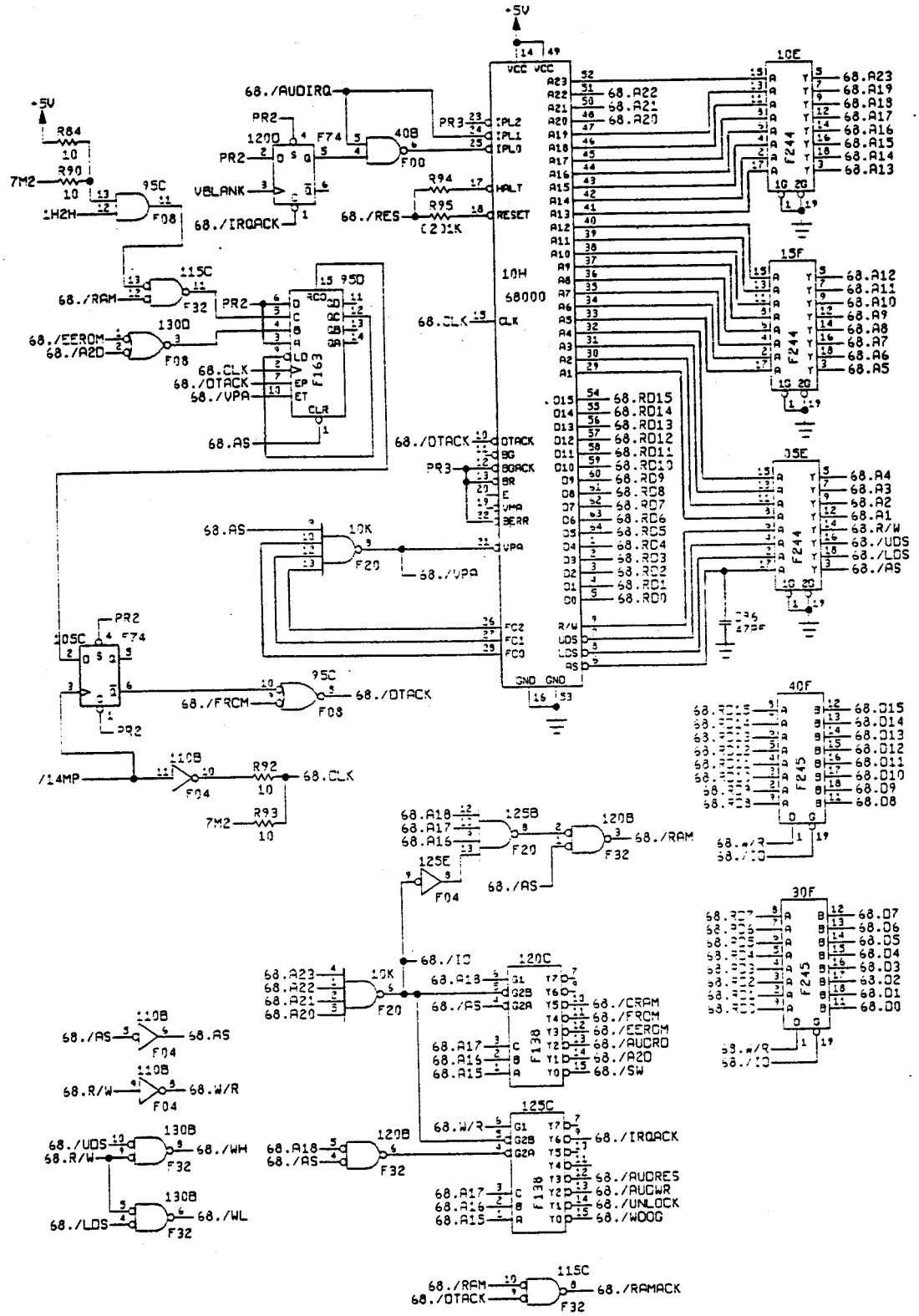
+5V
68./AUDIRQ
PR2
120D
F74
40B
F00
PR3
IPL2
IPL1
IPL0
VBLANK
68./IRQACK
R94
R95
68./RES
(2)1K
HALT
RESET
10H
68000
68.CLK
CLK
68./DTACK
DTACK
BG
BGACK
BR
E
VMA
BERR
VPA
FC2
FC1
FC0
R/W
UDS
LDS
AS
GND
10E
F244
68.A23
68.A19
68.A18
68.A17
68.A16
68.A15
68.A14
68.A13
15F
68.A12
68.A11
68.A10
68.A9
68.A8
68.A7
68.A6
68.A5
05E
68.A4
68.A3
68.A2
68.A1
68.R/W
68./UDS
68./LDS
68./AS
68.RD15
68.RD14
68.RD13
68.RD12
68.RD11
68.RD10
68.RD9
68.RD8
68.RD7
68.RD6
68.RD5
68.RD4
68.RD3
68.RD2
68.RD1
68.RD0
R84
10
R90
7M2
95C
F08
1H2H
115C
F32
68./RAM
130D
68./EEROM
68./A2D
95D
F163
68.CLK
68./DTACK
68./VPA
68.AS
10K
F20
68./VPA
105C
68./FROM
110B
F04
/14MP
R92
R93
40F
F245
68.D15
68.D14
68.D13
68.D12
68.D11
68.D10
68.D9
68.D8
68.W/R
68./IO
125B
120B
68./RAM
125E
68./AS
30F
68.D7
68.D6
68.D5
68.D4
68.D3
68.D2
68.D1
68.D0
68./IO
120C
F138
68./CRAM
68./FROM
68./EEROM
68./AUDRD
68./A2D
68./SW
68./AS
68.R/W
68.W/R
68./UDS
68./WH
68./LDS
68./WL
125C
68./IRQACK
68./AUDRES
68./AUDWR
68./UNLOCK
68./WDOG
68./RAMACK

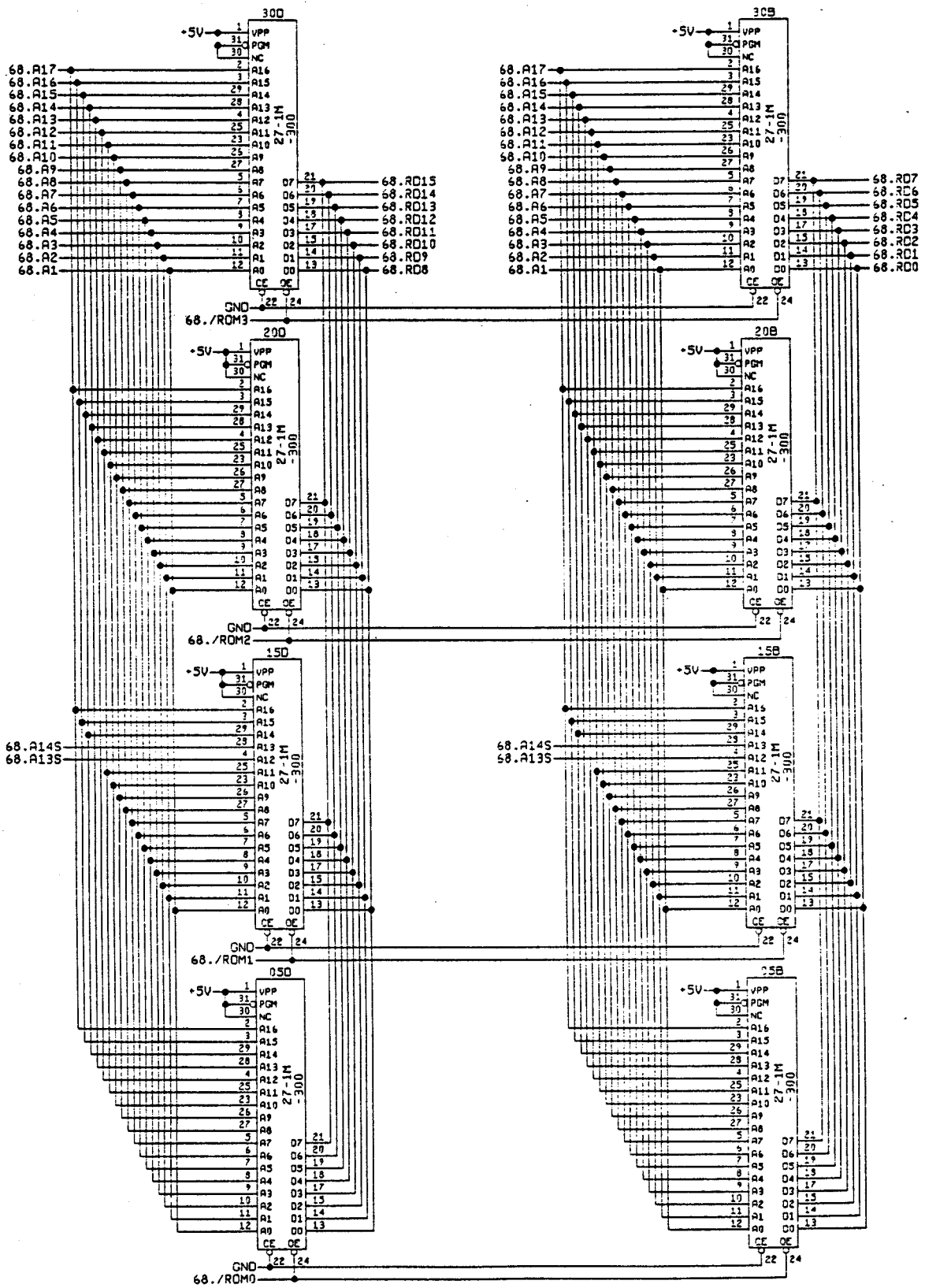

Figure 5-1 Hydra Game PCB Assembly Schematic Diagram

045977-01 A

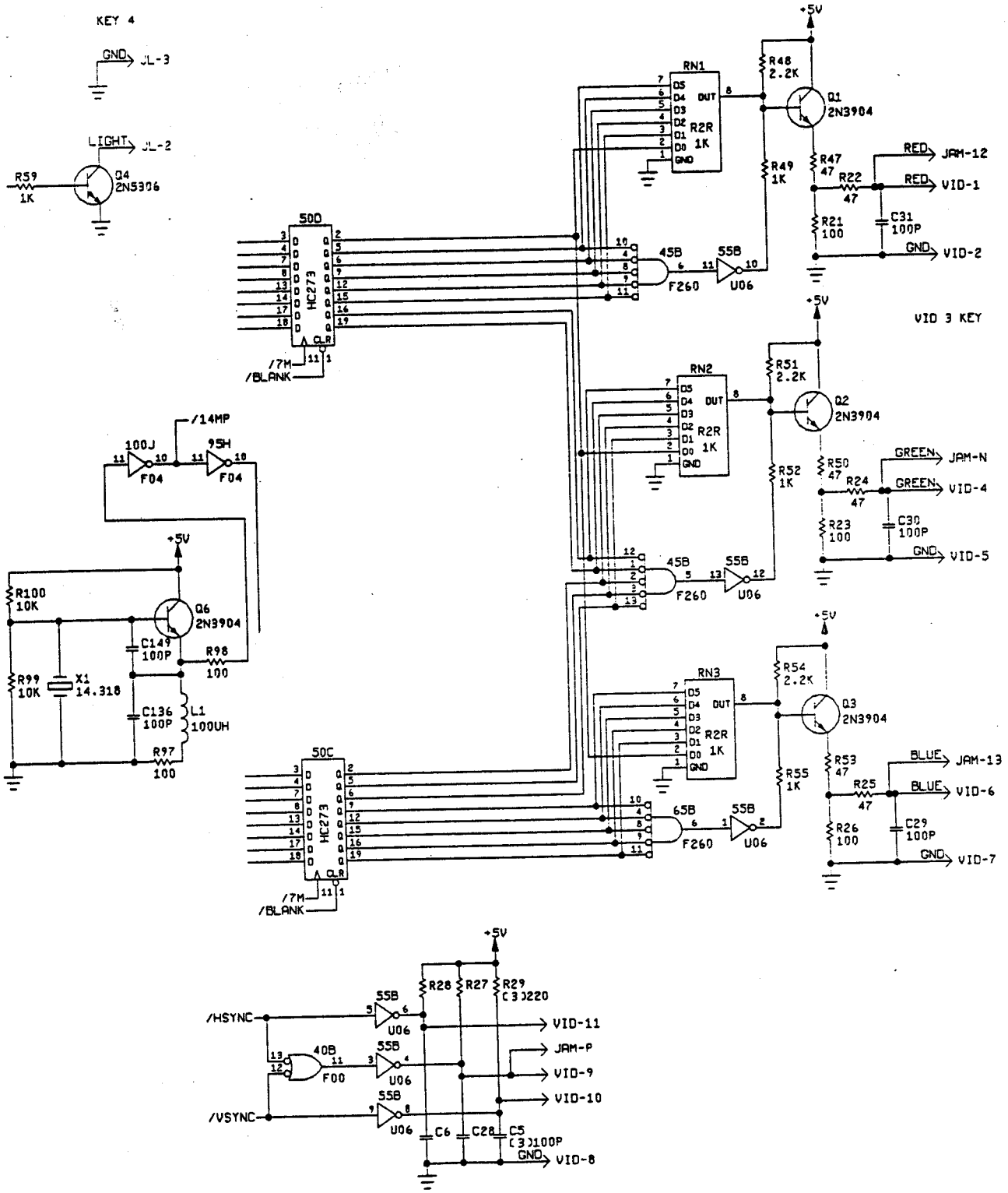
KEY 4
GND
JL-3
LIGHT
JL-2
R59
1K
Q4
2N5306
+5V
RN1
R2R
1K
R48
2.2K
Q1
2N3904
R49
1K
R47
47
R22
47
RED
JAM-12
RED
VID-1
R21
100
C31
100P
GND
VID-2
50D
HC273
/7M
/BLANK
45B
F260
55B
U06
VID 3 KEY
RN2
R51
2.2K
Q2
2N3904
R52
1K
R50
47
R24
47
GREEN
JAM-N
GREEN
VID-4
R23
100
C30
100P
GND
VID-5
/14MP
100J
F04
95H
F04
R100
10K
Q6
2N3904
C149
100P
R98
100
R99
10K
X1
14.318
C136
100P
L1
100UH
R97
100
RN3
R2R
1K
R54
2.2K
Q3
2N3904
R55
1K
R53
47
R25
47
BLUE
JAM-13
BLUE
VID-6
R26
100
C29
100P
GND
VID-7
50C
HC273
/7M
/BLANK
65B
F260
55B
U06
/HSYNC
/VSYNC
40B
F00
R28
R27
R29
VID-11
JAM-P
VID-9
VID-10
C6
C28
C5
100P
GND
VID-8

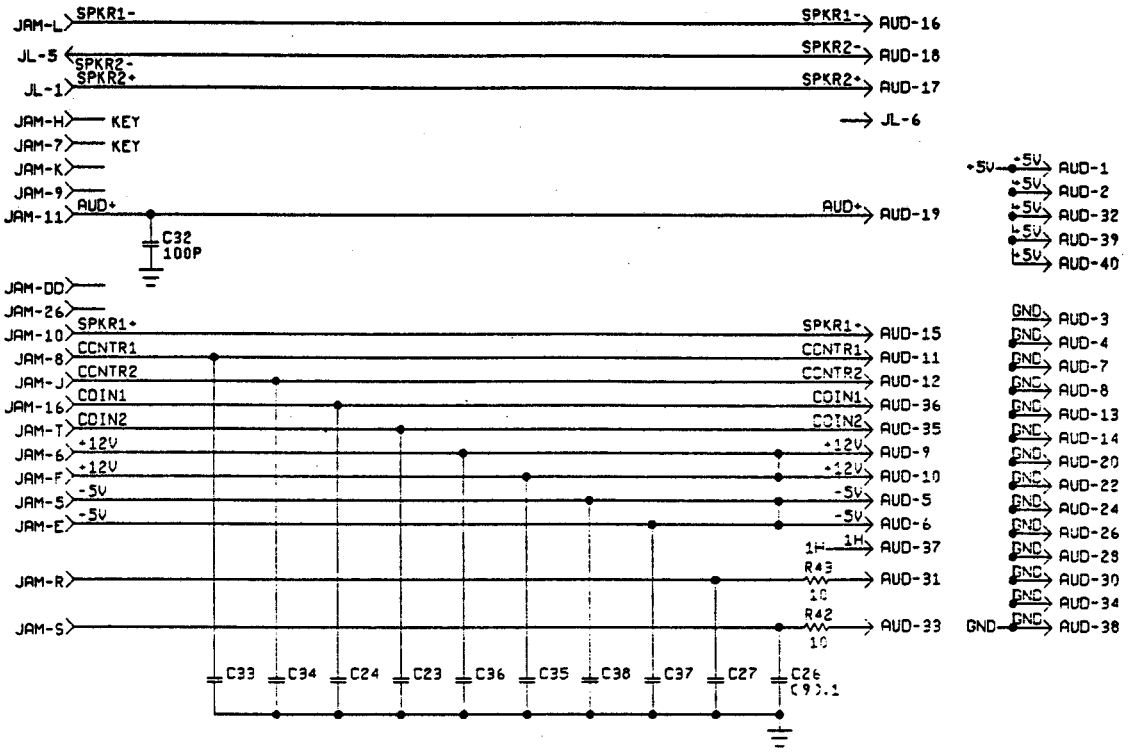

Figure 5-1 Hydra Game PCB Assembly Schematic Diagram

045977-01 A

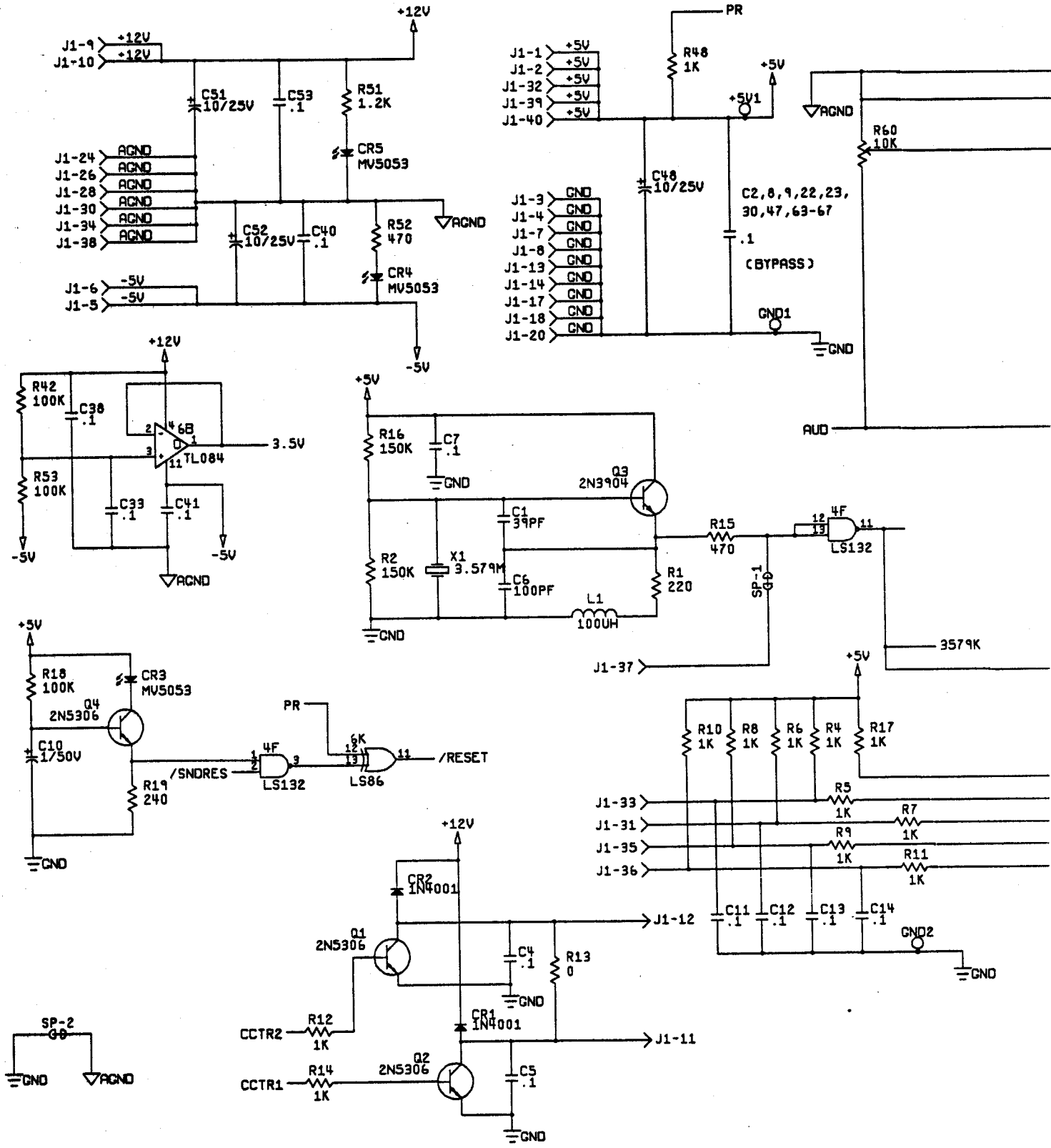
+12V
J1-9 +12V
J1-10 +12V
C51 10/25V
C53 .1
R51 1.2K
CR5 MV5053
J1-24 AGND
J1-26 AGND
J1-28 AGND
J1-30 AGND
J1-34 AGND
J1-38 AGND
AGND
C52 10/25V
C40 .1
R52 470
CR4 MV5053
J1-6 -5V
J1-5 -5V
-5V
PR
J1-1 +5V
J1-2 +5V
J1-32 +5V
J1-39 +5V
J1-40 +5V
R48 1K
+5V
+5V1
AGND
R60 10K
C48 10/25V
C2,8,9,22,23, 30,47,63-67 .1 (BYPASS)
J1-3 GND
J1-4 GND
J1-7 GND
J1-8 GND
J1-13 GND
J1-14 GND
J1-17 GND
J1-18 GND
J1-20 GND
GND1
GND
AUD
R42 100K
C38 .1
TL084
3.5V
R53 100K
C33 .1
C41 .1
-5V
AGND
R16 150K
C7 .1
GND
Q3 2N3904
C1 39PF
R2 150K
X1 3.579M
C6 100PF
L1 100UH
R1 220
R15 470
4F
LS132
SP-1
3579K
J1-37
R18 100K
CR3 MV5053
Q4 2N5306
C10 1/50V
R19 240
/SNDRES
PR
4F
LS132
6K
LS86
/RESET
R10 1K
R8 1K
R6 1K
R4 1K
R17 1K
R5 1K
R7 1K
R9 1K
R11 1K
J1-33
J1-31
J1-35
J1-36
C11 .1
C12 .1
C13 .1
C14 .1
GND2
CR2 1N4001
Q1 2N5306
J1-12
C4 .1
R13 0
CR1 1N4001
J1-11
R12 1K
CCTR2
R14 1K
CCTR1
Q2 2N5306
C5 .1
SP-2
GND
AGND

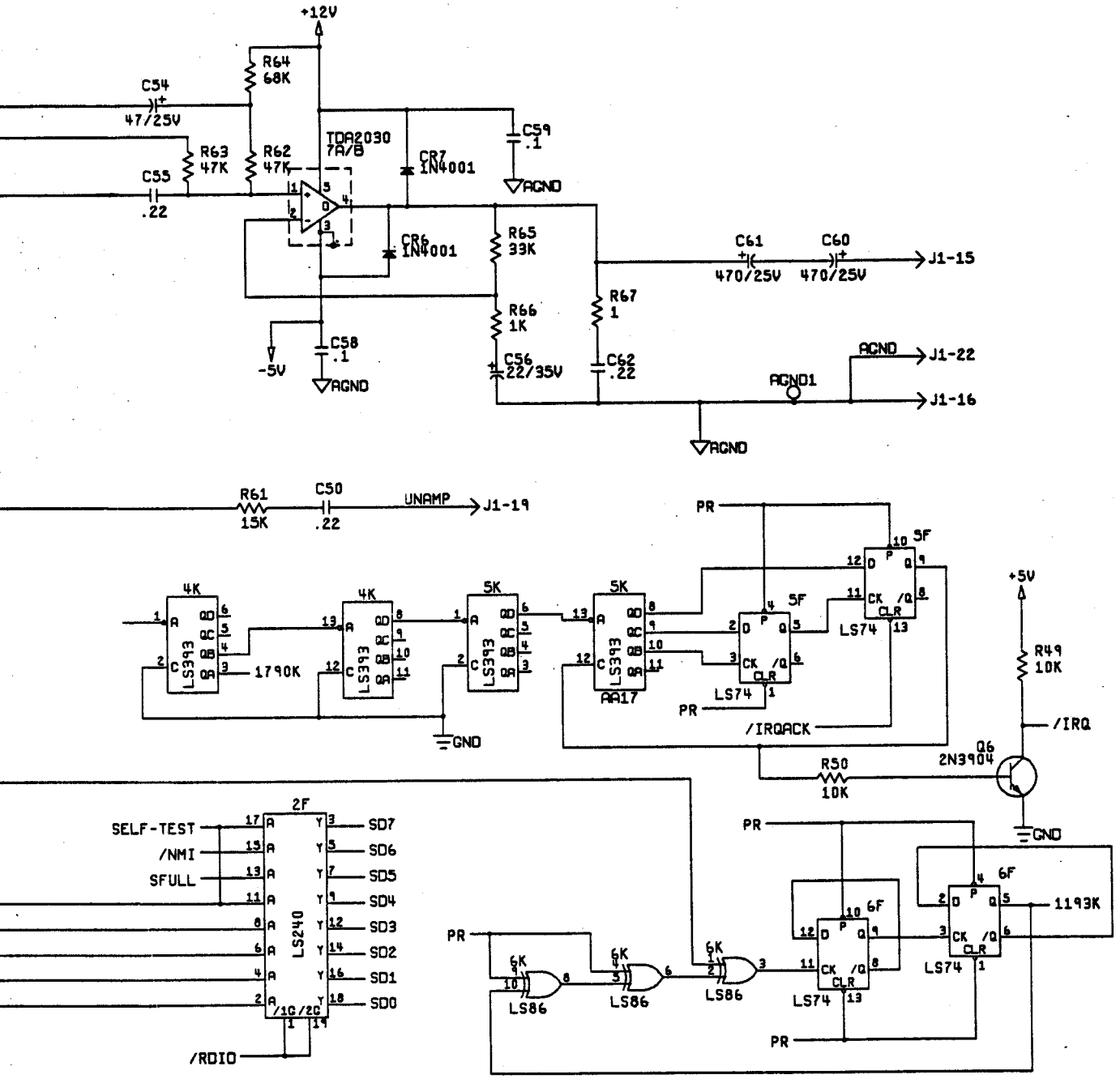

Figure 5-2 JSA Audio II PCB Assembly Schematic Diagram

046487-01 E

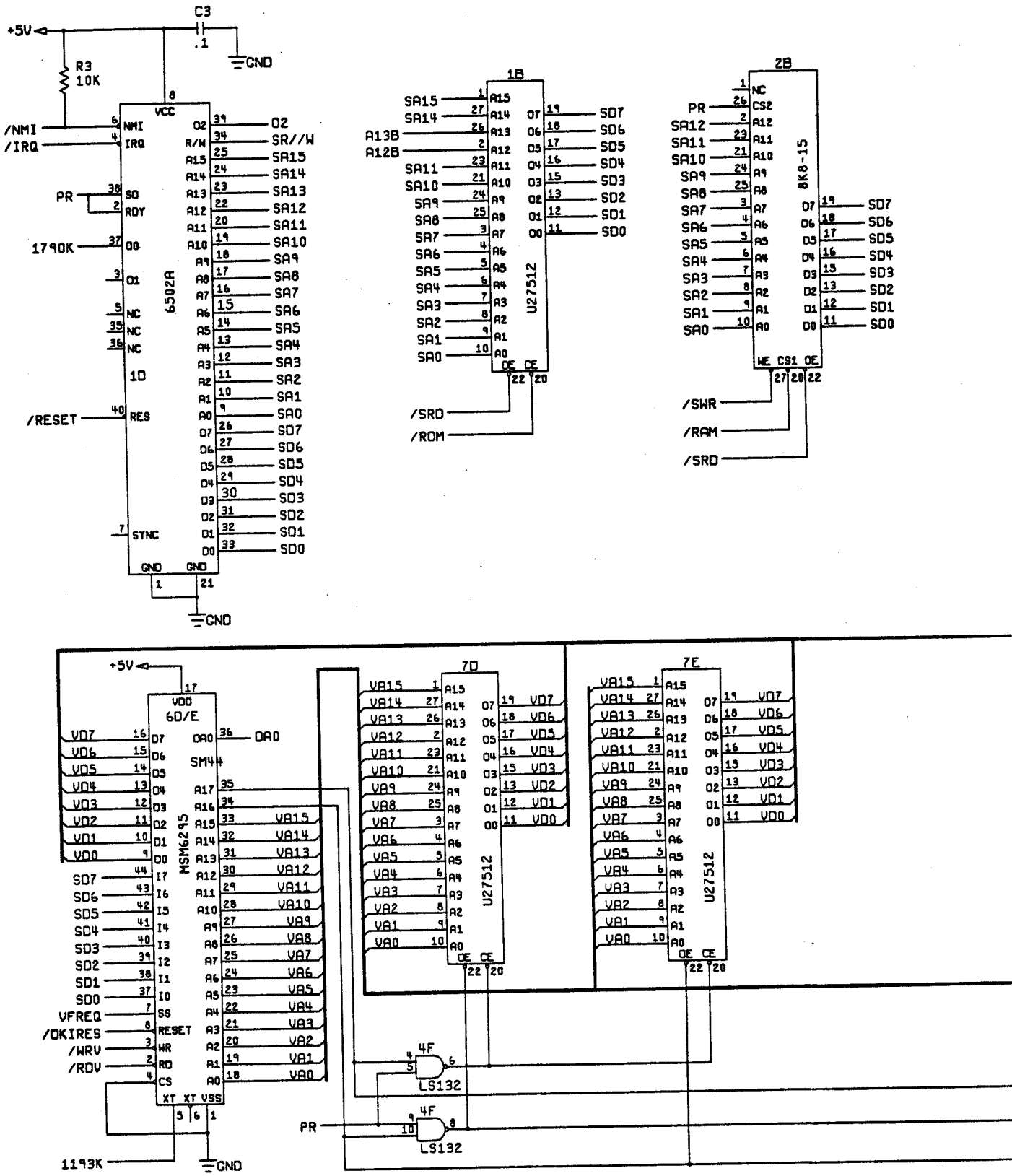
+5V
C3
.1
GND
R3
10K
/NMI
/IRQ
PR
1790K
/RESET
6502A
1D
VCC
NMI
IRQ
SO
RDY
O0
O1
NC
RES
SYNC
GND
O2
R/W
SR//W
SA15
SA14
SA13
SA12
SA11
SA10
SA9
SA8
SA7
SA6
SA5
SA4
SA3
SA2
SA1
SA0
SD7
SD6
SD5
SD4
SD3
SD2
SD1
SD0
1B
U27512
A13B
A12B
/SRD
/ROM
2B
8K8-15
/SWR
/RAM
/SRD
6D/E
MSM6295
SM44
VDD
DA0
VFREQ
/OKIRES
/WRV
/RDV
1193K
7D
7E
4F
LS132

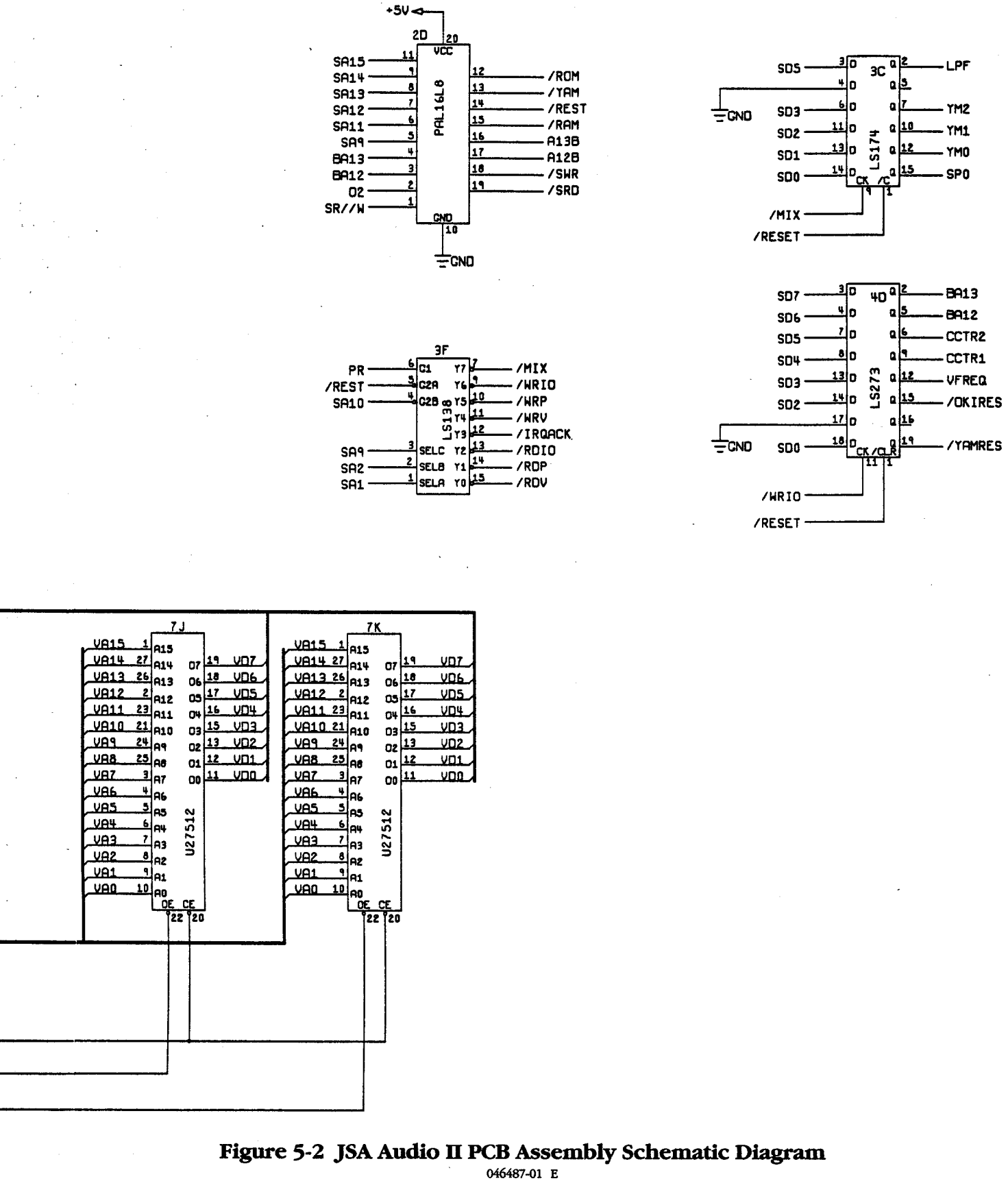

Figure 5-2 JSA Audio II PCB Assembly Schematic Diagram

046487-01 E

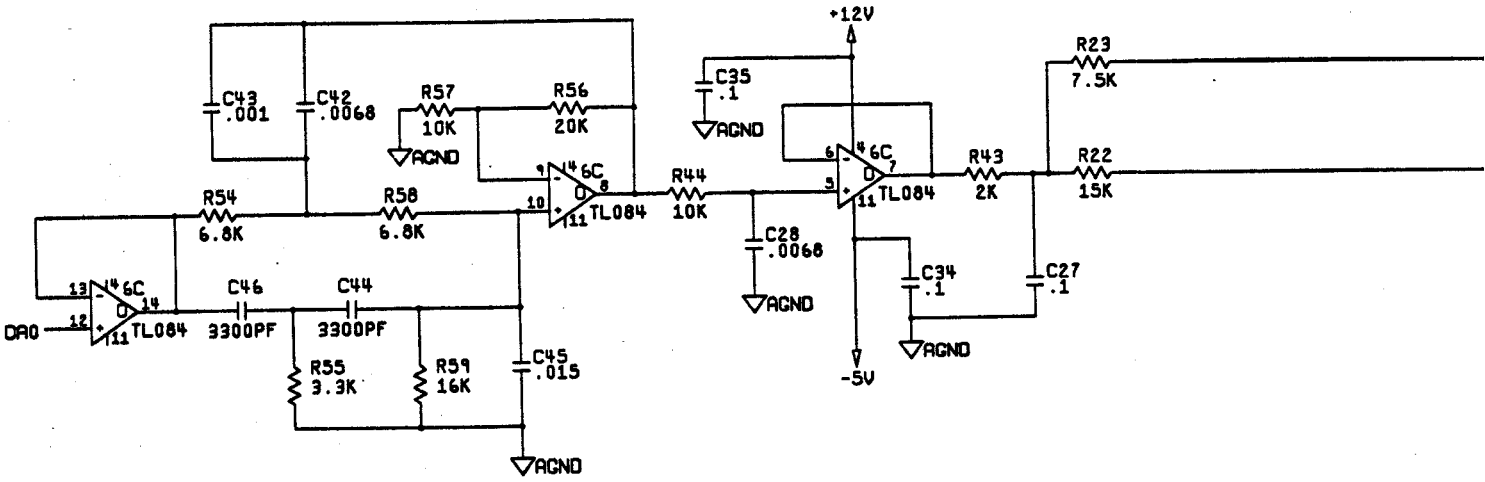
+12V
C43 .001
C42 .0068
R57 10K
R56 20K
C35 .1
AGND
R23 7.5K
R54 6.8K
R58 6.8K
R44 10K
R43 2K
R22 15K
C28 .0068
C34 .1
C27 .1
DA0
C46 3300PF
C44 3300PF
R55 3.3K
R59 16K
C45 .015
-5V
TL084
AGND

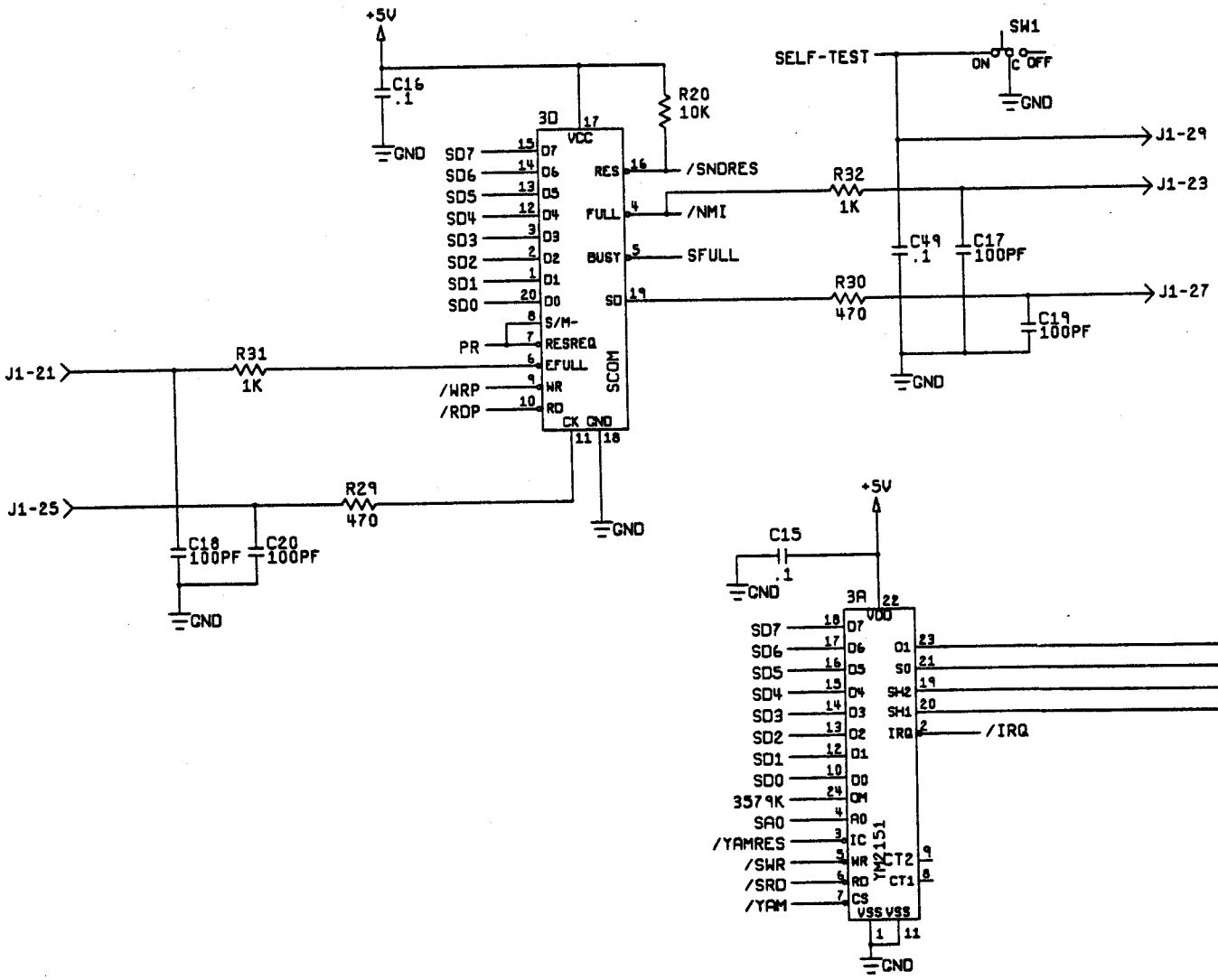
+5V
C16 .1
GND
R20 10K
SW1
SELF-TEST
ON
OFF
J1-29
J1-23
J1-27
R32 1K
R30 470
C49 .1
C17 100PF
C19 100PF
3D
SCOM
SD7
SD6
SD5
SD4
SD3
SD2
SD1
SD0
VCC
RES
/SNORES
FULL
/NMI
BUSY
SFULL
SD
S/M-
PR
RESREQ
EFULL
/WRP
WR
/RDP
RD
CK
J1-21
R31 1K
J1-25
R29 470
C18 100PF
C20 100PF
C15 .1
3A
YM2151
VDD
SD7
SD6
SD5
SD4
SD3
SD2
SD1
SD0
3579K
SA0
/YAMRES
/SWR
/SRD
/YAM
O1
SO
SH2
SH1
IRQ
/IRQ
IC
WR
RD
CS
CT2
CT1
VSS

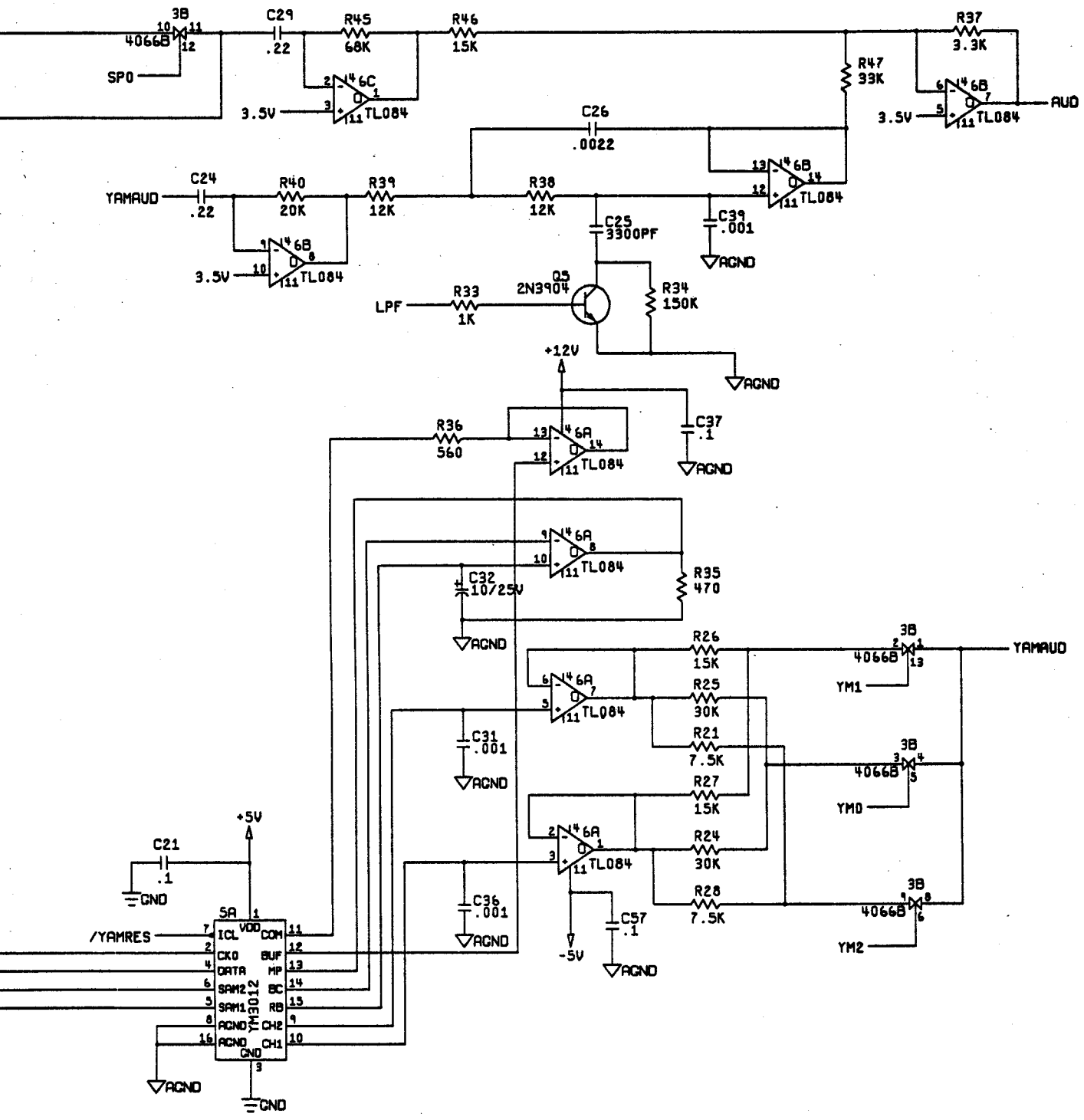

Figure 5-2 JSA Audio II PCB Assembly Schematic Diagram

046487-01 E

Bad RAM Location by Error Address

Error Address	RAM Location High	Low
FE8000 (Color RAM)	45D	45C
FF0000 (Video RAM)	35J	25J

Bad ROM Location by Error Address

Error Address	RAM Location High	Low
000000	5D	5B
020000	30D	30B
040000	20D	20B
060000	15D	15B

Figure 5-3 Faulty RAM/ROM Tables

ATARI GAMES

Hydra Statistics Sheet

Statistics Screen

Left Coins:	_____	
Right Coins:	_____	
New Games:	_____	
Continued Games:	_____	
Free Games:	_____	
Novice:	_____	
Intermediate:	_____	
Advanced:	_____	
Idle Time:	_____	
Active Time:	_____	
Error Count:	_____	
Total Credits:	_____	
Bought Coins:	_____	
Total Coins:	_____	
Avg. Time/Credit:	_____	sec.
Avg. Time/Coin:	_____	sec.

Histogram Screens

Histogram 1: Level died at (1A–6D)		**Histogram 2: Level died at (7A–9F)**		**Histogram 3: Level continued from (1A–6D)**	
1A	_____	7A	_____	1A	_____
1B	_____	7B	_____	1B	_____
2A	_____	7C	_____	2A	_____
2B	_____	7D	_____	2B	_____
2C	_____	8A	_____	2C	_____
3A	_____	8B	_____	3A	_____
3B	_____	8C	_____	3B	_____
3C	_____	8D	_____	3C	_____
4A	_____	9A	_____	4A	_____
4B	_____	9B	_____	4B	_____
4C	_____	9C	_____	4C	_____
5A	_____	9D	_____	5A	_____
5B	_____	9E	_____	5B	_____
5C	_____	9F	_____	5C	_____
6A	_____	FIN	_____	6A	_____
6B	_____			6B	_____
6C	_____			6C	_____
6D	_____			6D	_____

See over for Histograms 4–7

Hydra™ Statistics Sheet, continued

Histogram Screens

Histogram 4: Level continued from (7A–9F)		Histogram 5: New game times (seconds)		Histogram 6: Continued game times (seconds)		Histogram 7: Weapons bought	
7A	_____	0–29	_____	0–29	_____	UZI	_____
7B	_____	30–59	_____	30–59	_____	6WAY	_____
7C	_____	60–89	_____	60–89	_____	SHIELD	_____
7D	_____	90–119	_____	90–119	_____	NUKE	_____
8A	_____	120–149	_____	120–149	_____	FLAME	_____
8B	_____	150–179	_____	150–179	_____	AGRAV	_____
8C	_____	180–209	_____	180–209	_____	HOMER	_____
8D	_____	210–239	_____	210–239	_____	BOMBS	_____
9A	_____	240–269	_____	240–269	_____	SPARE	_____
9B	_____	270–299	_____	270–299	_____	SPARE	_____
9C	_____	300–329	_____	300–329	_____	SPARE	_____
9D	_____	330–359	_____	330–359	_____	SPARE	_____
9E	_____	360–389	_____	360–389	_____	SPARE	_____
9F	_____	390–419	_____	390–419	_____	FUEL	_____
		420–449	_____	420–449	_____	SPARE	_____
		450–479	_____	450–479	_____	COIN	_____
		480–509	_____	480–509	_____		
		510–539	_____	510–539	_____		
		540–569	_____	540–569	_____		
		570&UP	_____	570&UP	_____		

Warranty

Seller warrants that its printed-circuit boards and parts thereon are free from defects in material and workmanship under normal use and service for a period of ninety (90) days from date of shipment. Seller warrants that its video displays and laser-video disc players (in games supplied with displays and video-disc players) are free from defects in material and workmanship under normal use and service for a period of thirty (30) days from date of shipment. None of the Seller's other products or parts thereof are warranted.

If the products described in this manual fail to conform to this warranty, Seller's sole liability shall be, at its option, to repair, replace, or credit Buyer's account for such products which are returned to Seller during said warranty period, provided:

(a) Seller is promptly notified in writing upon discovery by Buyer that said products are defective;

(b) Such products are returned prepaid to Seller's plant; and

(c) Seller's examination of said products discloses to Seller's satisfaction that such alleged defects existed and were not caused by accident, misuse, neglect, alteration, improper repair, installation, or improper testing.

In no event shall Seller be liable for loss of profits, loss of use, incidental or consequential damages.

Except for any express warranty set forth in a written contract between Seller and Buyer which contract supersedes the terms herein, this warranty is expressed in lieu of all other warranties expressed or implied, including the implied warranties of merchantability and fitness for a particular purpose, and of all other obligations or liabilities on the Seller's part, and it neither assumes nor authorizes any other person to assume for the Seller any other liabilities in connection with the sale of products by Seller.

The use of any non-Atari parts may void your warranty, according to the terms of the warranty. The use of any non-Atari parts may also adversely affect the safety of your game and cause injury to you and others. Be very cautious in using non-Atari-supplied components with our games, in order to ensure your safety.

Atari distributors are independent, being privately owned and operated. In their judgment they may sell parts or accessories other than Atari parts or accessories. Atari Games Corporation cannot be responsible for the quality, suitability or safety of any non-Atari part or any modification including labor which is performed by such distributor.

Atari Games Corporation

675 Sycamore Drive

P.O. Box 361110

Milpitas, CA 95036